TELEDYNE
EXPLORATION

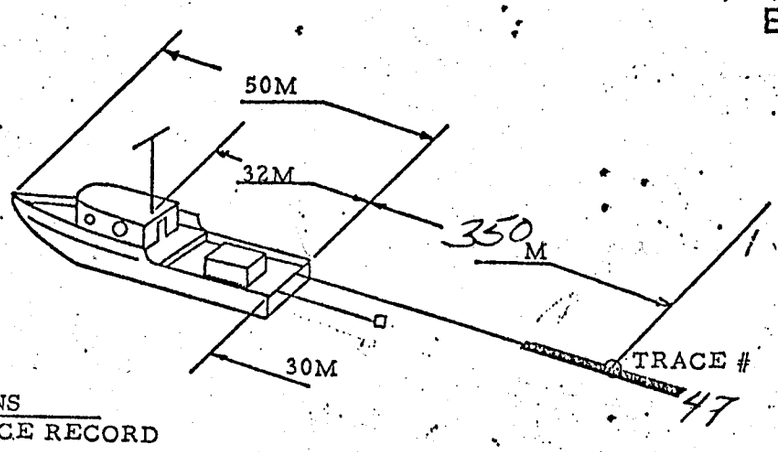

AIR GUNS
SINGLE TRACE RECORD

LINE 14-A 14B
CLIENT U.S. GEOLOGICAL SURVEY
PROSPECT EAST COAST U.S. REGIONAL 1977
DATE 4-5-77
W.O. NO. 14-08-0001-16209

ACOUSTIC SOURCE 4 PNEUMATIC AIR GUNS (2K PSI)
SOURCE DEPTH ± 1.4 M
FIRING RATE INTERVAL 50 M
HYDROSTREAMER TYPE TXC TRACE
HYDROSTREAMER DEPTH ± 15.24 M
SWEEP RATE 18 SECONDS

POSITIONING SATNAV
WEATHER BEAUFORT
MOTOR VESSEL CORAL SEAL
VESSEL SPEED KNOTS
FIX INTERVAL KM

FACSIMILE RECORDER TYPE EPC 4600
TRACES/INCH
AMPLIFIER TYPE DFS IV
FILTERS HI AUTO LO OUT
AGC RATE (dB/sec)

REMARKS:

08:11 HRS GMT FSP 1001 START OF LINE WD 41 FATHOMS
2737 HRS GMT LSP 2193 END OF LINE WD 42 FATHOMS

NOTES

RECORDER DOWN SP 1181 LINE 14 A TO SP 1801

CREW NO. 705
OPERATORS INITIALS

CLIENT REPRESENTATIVE BILL PATTERSON
CREW CHIEF [illegible]

TELEDYNE EXPLORATION

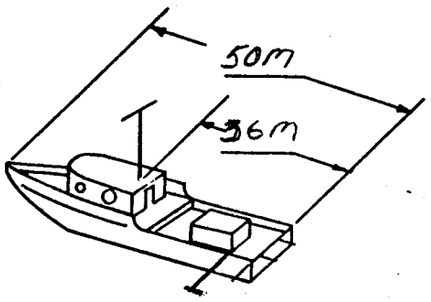

3.5 KH = 1.2
TOWING ARRAY

LINE 14A - 14B (Dogleg)
CLIENT U.S. GEOLOGICAL SURVEY
PROSPECT E. COAST U.S. REGIONAL 1977
DATE 246
W.O. NO. 14-08-0001-16209

ACOUSTIC SOURCE ORE MODEL 140
SOURCE DEPTH 15m
FIRING RATE N.A.
TRANSDUCER TYPE Model 100
TRANSDUCER DEPTH 15m
SWEEP RATE 1 second

POSITIONING SATNAV
WEATHER BEAUFORT - 4
MOTOR VESSEL CORAL SEAL
VESSEL SPEED 5 KNOTS
FIX INTERVAL 2 KM

FACSIMILE RECORDER TYPE RAYTHEON
TRACES/INCH 16
AMPLIFIER TYPE ORE Model 140
FILTERS HI NA LO NA
AGC RATE (dB/sec) NA

REMARKS:

2211 HRS GMT FSP 1221 START OF LINE

2321 HRS GMT LSP 2241 END OF LINE

TIME AT TOP OF RECORD 6 SECONDS

APPROXIMATE DEPTH AT TOP OF RECORD 0 FATHOMS

Notes: Missed N.C. (1221 SP)
MISSED NC (2041 SP)
MISSED NC (2141 SP)
[illegible]
@ 14:54
[illegible]
MISSED NC 1341
ORE Skipped CFE due to lost of #1 generator (Freq 917)
S.P 1667 CRE ON
Misclosure on Fix Mark Sp 2221

CREW NO. 705
OPERATORS INITIALS A.M.
CLIENT REPRESENTATIVE B. PATTERSON
CREW CHIEF FONTENOT - SPRINGER

U.S.G.S. CONTRACT NO. 14-08-0001-16209

TELEDYNE EXPLORATION

OBSERVER'S DAILY REPORT

8077

PARTY NO. 705 SYSTEM TYPE DFS IV DATE 246

CLIENT USGS
LINE NO. 14A-14B DIR. 029 DEG.
PROSPECT North Area
LOCATION EAST COAST USA
SAMPLE RATE 2 MS. BPI 1600
RECORD LENGTH 12 SEC.

PRIME NAVIGATION SATNAV.
CABLE TYPE TEC 48 TRACE
TRACE INT 48→25=50M/24→1=100M
SHOT INT. 50 M.
WEATHER B-H
OBSERVER POSTEN - PALMER

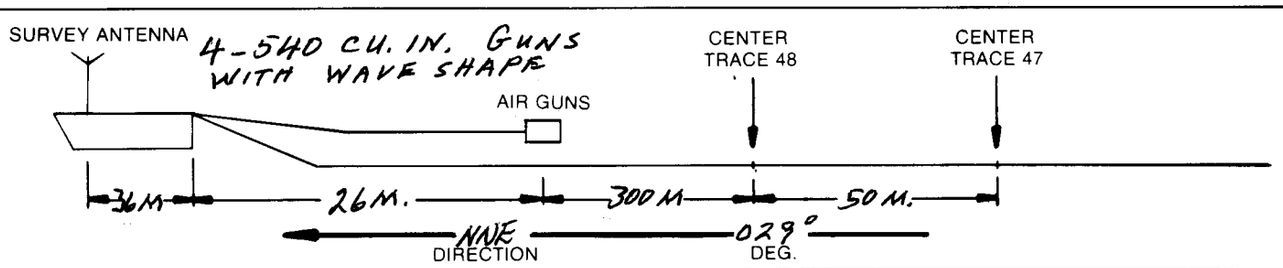

RECORD				REPRODUCE				
INPUT GAIN (500 OHM IMP)	FILTERS LO/SLOPE	FILTERS HI	MAN / IFP	FILTERS LO	FILTERS HI	TRIP SENSE	INITIAL GAIN	MODE
36 +6	8/18	124	IFP	OUT	AUTO	30	36	A.G.C.

DECK NO.	REEL NO.	CONSTANTS DAY NO.	CONSTANTS LINE NO.	CONSTANTS DIR. DEG.	FILE NO. FROM	FILE NO. TO	SP NO. FROM	SP NO. TO	TIME START	TIME FINISH
2	129	246	140/000	29	001	050	1001	1050	0811	0827
1	130				051	100	1051	1100	0827	0843
2	131				101	112	1101	1112	0843	0846
1	132				113	150	1113	1150	0846	0859
2	133				151	200	1151	1200	0859	0915
1	134				201	250	1201	1250	0915	0932
2	135				251	300	1251	1300	0932	0948
1	136				301	341	1301	1341	0948	1001
2	137				342	389	1342	1389	1001	1017
1	138				390	440	1390	1440	1017	1034
2	139				441	490	1441	1490	1634	1050
1	140				491	540	1491	1540	1050	1106
2	141				541	590	1541	1590	1106	1122
1	142				591	640	1591	1640	1122	1138
2	143				641	690	1641	1690	1138	1154
1	144				691	740	1691	1740	1154	1210
2	145				741	790	1741	1790	1210	1225
1	146				791	840	1791	1840	1225	1240
2	147				841	890	1841	1890	1240	1255
1	148				891	940	1891	1940	1255	1310
2	149				941	990	1941	1990	1310	1326
1	150		90		991	041	1991	2040	1326	1342
2	151				042	091	2041	2090	1342	1357
1	152				092	141	2091	2140	1357	1413
2	153				142	191	2141	2190	1413	1429
1	154				192	241	2191	2240	1429	1445
2	155				242	268	2241	2267	1445	1454

U. S. G. S. CONTRACT NO. 14-08-0001-16209

8077

TELEDYNE EXPLORATION

OBSERVER'S DAILY REPORT

PARTY NO. 705 **SYSTEM TYPE** DFS IV **DATE** 246

CLIENT U.S.G.S. PRIME NAVIGATION SAT. NAV

LINE NO. 14-B DIR. ____ DEG. CABLE TYPE TEC. 48 TR.

PROSPECT NORTH AREA TRACE INT TR. 1-24 = 100M TR. 25-48 = 50 M

LOCATION EAST COAST U.S.A. SHOT INT. 50 M

SAMPLE RATE 2 MS. BPI 1600 WEATHER B-4

RECORD LENGTH 12 SEC. OBSERVER Palmer / Posten

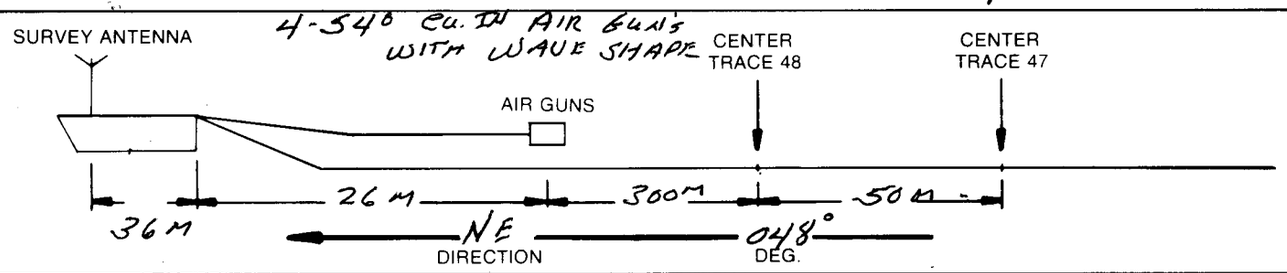

RECORD				REPRODUCE				
INPUT GAIN (500 OHM IMP)	FILTERS LO/SLOPE	FILTERS HI	MAN / IFP	FILTERS LO	FILTERS HI	TRIP SENSE	INITIAL GAIN	MODE
36+6	8/18	124	IFP	OUT	AUTO	36	30	AGC

DECK NO.	REEL NO.	CONSTANTS DAY NO.	CONSTANTS LINE NO.	CONSTANTS DIR. DEG.	FILE NO. FROM	FILE NO. TO	SP NO. FROM	SP NO. TO	TIME START	TIME FINISH
1	156	246	1402000	048	269	316	1001	1050	1454	1509
2	157				317	366	1051	1100	1509	1525
1	158				367	416	1101	1150	1525	1540
2	159				417	466	1151	1200	1540	1555
1	160				467	516	1201	1250	1555	1610
2	161				517	566	1251	1300	1610	1625
1	162				567	616	1301	1350	1625	1640
2	163				617	666	1351	1400	1640	1656
1	164				667	716	1401	1450	1656	1711
2	165				717	766	1451	1500	1711	1725
1	166				767	816	1501	1550	1725	1740
2	167				817	866	1551	1600	1740	1756
1	168				867	916	1601	1650	1756	1811
2	169				917	966	1651	1700	1811	1826
1	170				967	017	1701	1750	1826	1842
2	171				018	067	1751	1800	1842	1858
1	172				068	117	1801	1850	1858	1913
2	173				118	167	1851	1900	1913	1929
1	174				168	217	1901	1950	1929	1945
2	175				218	264	1954	2000	1945	2001
1	176				265	314	2001	2050	2001	2017
2	177				315	364	2051	2100	2017	2033
1	178				365	414	2101	2150	2033	2049

U. S. G. S. CONTRACT NO. 14-08-0001-16209

8077

TELEDYNE EXPLORATION

OBSERVER'S DAILY REPORT

PARTY NO. 705 **SYSTEM TYPE** DFS III **DATE** 246

CLIENT U.S.G.S. **PRIME NAVIGATION** Sat. Nav.

LINE NO. 14-B **DIR.** 048 **DEG.** **CABLE TYPE** TEC 48 Trace

PROSPECT North Area **TRACE INT** 48→25 = 50m / 1→24 = 100m

LOCATION East Coast **SHOT INT.** 50m

SAMPLE RATE 2 **MS. BPI** 1600 **WEATHER** B-4

RECORD LENGTH 12 **SEC.** **OBSERVER** Posten / Palmer

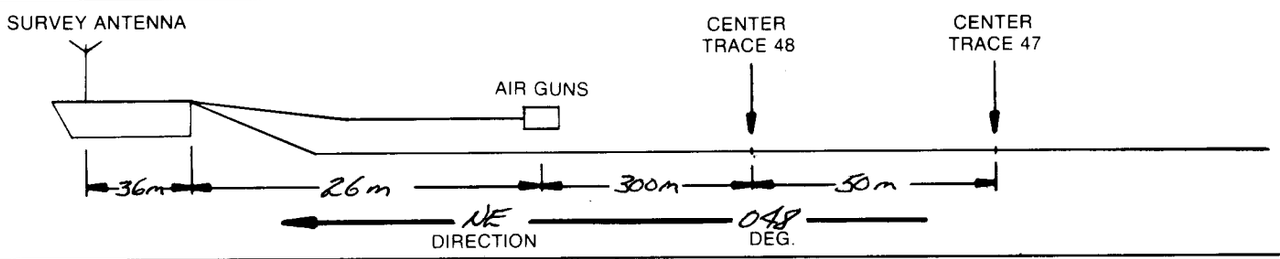

RECORD				REPRODUCE				
INPUT GAIN (500 OHM IMP)	FILTERS LO/SLOPE	FILTERS HI	MAN / IFP	FILTERS LO	FILTERS HI	TRIP SENSE	INITIAL GAIN	MODE
36+6	8/18	124	IFP	Out	Auto	30	30	AGC

DECK NO.	REEL NO.	CONSTANTS DAY NO.	CONSTANTS LINE NO.	CONSTANTS DIR. DEG.	FILE NO. FROM	FILE NO. TO	SP NO. FROM	SP NO. TO	TIME START	TIME FINISH
2	179	246	140200	048	415	464	2151	2200	2049	2105
1	180				465	514	2201	2250	2105	2121
2	181				515	564	2251	2300	2121	2136
1	182				565	614	2301	2350	2136	2152
2	183				615	664	2351	2400	2152	2208
1	184				665	714	2401	2450	2208	2223
2	185				715	751	2451	2493	2223	2237
						LINE COMPLETE				

A

U. S. G. S. CONTRACT NO. 14-08-0001-16209

8077

TELEDYNE EXPLORATION

OBSERVER'S DAILY REPORT

9-3-77

PARTY NO. 705 SYSTEM TYPE DFS II DATE 246

CLIENT U.S.G.S. PRIME NAVIGATION Sat. Nav.
LINE NO. 14A-14B DIR. 029 DEG. CABLE TYPE TEC-48 Trace
PROSPECT North Area TRACE INT 48→25=50m/24→1=100m
LOCATION East Coast USA SHOT INT. 50m
SAMPLE RATE 2 MS. BPI 1600 WEATHER B-4
RECORD LENGTH 12 SEC. OBSERVER Posten / Palmer

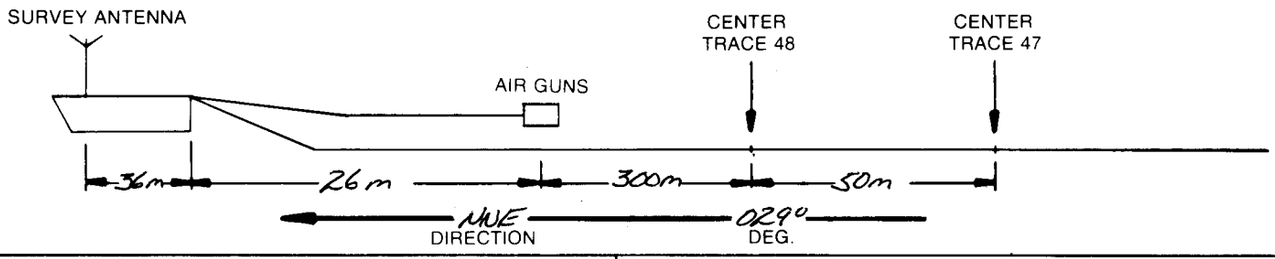

RECORD				REPRODUCE				
INPUT GAIN (500 OHM IMP)	FILTERS		MAN / IFP	FILTERS		TRIP SENSE	INITIAL GAIN	MODE
	LO/SLOPE	HI		LO	HI			
36 +6	8/18	124	IFP	Out	Auto	30	36	ACC

DECK NO.	REEL NO.	CONSTANTS			FILE NO.		SP NO.		TIME	
		DAY NO.	LINE NO.	DIR. DEG.	FROM	TO	FROM	TO	START	FINISH
	14A									
NOTES:	*	OTHER SEIS CREW SHOOTING IN AREA								
	*	TAPE #131 - BAD TAPE								
		Sonobuoy out on S.P. (1001)								
		Guns: 4-540 cu. in. with wave shape								
		UNKNOWN NOISE ON RECORD @ SP1521								
		SHIP NOISE ON RECORD @ SP1201								
		SONOBUOY OFF @ 1209 SP 1738								
		SHIP NOISE OFF RECORD @ SP1761								
		WENT MANUAL @ SP 2267 TO RESTART COMPUTER ON DOGLEG LINE 14B GAINED TWO SHOT FROM SAT/NAV WHEN THEY CHANGED THEIR NEW HEADING FOR THIS LINE								
	14B	#3 gun out (4X Replacement)					S.P 1261			
		#3 gun in on S.P. (1401)								
		Sonobuoy put out on S.P. (1401)								

B

U. S. G. S. CONTRACT NO. 14-08-0001-16209

TELEDYNE EXPLORATION

OBSERVER'S DAILY REPORT

3077

PARTY NO. 705 SYSTEM TYPE DFS DATE 9-3-77 246

CLIENT U.S.G.S
LINE NO. 14A-14B DIR. ~~048~~ 228 DEG.
PROSPECT North AREA
LOCATION East Coast USA
SAMPLE RATE 2 MS. BPI 1600
RECORD LENGTH 12 SEC.

PRIME NAVIGATION Sat. NAV.
CABLE TYPE TEC-48 TRACE
TRACE INT 48→25-50m/24→1=100m
SHOT INT. 50 m
WEATHER B-4
OBSERVER Poster/Palmer

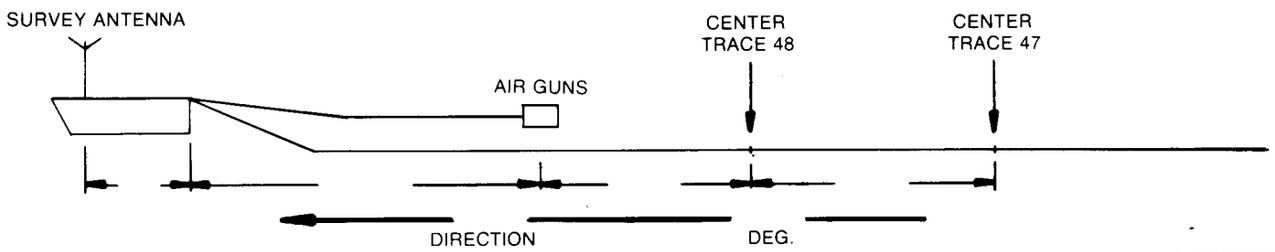

RECORD				REPRODUCE				
INPUT GAIN (500 OHM IMP)	FILTERS LO/SLOPE	FILTERS HI	MAN / IFP	FILTERS LO	FILTERS HI	TRIP SENSE	INITIAL GAIN	MODE

DECK NO.	REEL NO.	CONSTANTS DAY NO.	CONSTANTS LINE NO.	CONSTANTS DIR. DEG.	FILE NO. FROM	FILE NO. TO	SP NO. FROM	SP NO. TO	TIME START	TIME FINISH
	14B	Notes:							@ (Time 1749)	
		Sonobuoy replaces channel 48 S.P. (1569)								
		File # 917-Bad (#1 generator went out)								
		Lost 3 ~~files~~ S.P. on LINE 14B (1951, 1952, 1953)								
		SP-2143 SONA BUOY OFFLINE @ 2048 - TRACE 48 NORMAL @ SP-2145								
		S.P.#2330 Another Seis. Crew in Area								

LINE NO. 14-B DIR. 047 DEG. PARTY NO. 705 DATE 246 PAGE 2 8077A

CABLE DEPTH	WATER DEPTH	NO. GUNS	GUN PRES.	GUN DEPTH	SHIPS HEAD	TAIL BOUY
1.42.2.43.3.44.4.45.5.46.6.46	42 FA	4-540	2KPSI	30'	052	DRIFT -002

FILE NO.	SP NO.	REMARKS	FILE NO.	SP NO.	REMARKS
00			50		
01			51		
02			52		
03			53		
04			54		
05			55		
06			56		
07	1041	BACK ON COMPUTER	57		
08			58		
09			59		
10			60		
11			61		
12			62		
13			63		
14		U. S. G. S. CONTRACT NO. 14-08-0001-16209	64		
15			65		
16			66		
17			67		
18			68		
19			69		
20			70		
21			71		
22			72		
23			73		
24			74		
25			75		
26			76		
27			77		
28			78		
29			79		
30			80		
31			81		
32			82		
33			83		
34			84		
35			85		
36			86		
37			87		
38			88		
39			89		
40			90		
41			91		
42			92		
43			93		
44			94		
45			95		
46			96		
47			97		
48			98		
49			99		

LINE NO. 14B DIR. 050 DEG. PARTY NO. 705 DATE 246 PAGE 3 8077A

CABLE DEPTH	WATER DEPTH	NO. GUNS	GUN PRES.	GUN DEPTH	SHIPS HEAD	TAIL BOUY
1. 2. 3. 4. 5. 6.						

FILE NO.	SP NO.	REMARKS	FILE NO.	SP NO.	REMARKS
00			50		
01			51		
02			52		
03			53		
04			54		
05			55		
06			56		
07			57		
08			58		
09			59		
10			60		
11			61		
12			62		
13			63		
14			64		
15			65		
16			66		
17	1980	EOR #174 to 1945	67		
18	1954		68		
19			69		
20			70		
21	1957		71		
22			72		
23			73		
24			74		
25			75		
26			76		
27			77		
28			78		
29			79		
30	1966	Back on MX21	80		
31			81		
32			82		
33			83		
34			84		
35			85		
36			86		
37			87		
38			88		
39			89		
40			90		
41			91		
42			92		
43			93		
44			94		
45			95		
46			96		
47			97		
48			98		
49			99		

U. S. G. S. CONTRACT
NO. 14-08-0001-16209

LINE NO. 14-B DIR. 047 DEG. PARTY NO. 205 DATE 246 PAGE 1 8077A

CABLE DEPTH	WATER DEPTH	NO. GUNS	GUN PRES.	GUN DEPTH	SHIPS HEAD	TAIL BOUY
1.472.543.484.505.526.46	41 FA	4-540	2KPSI	30'	038	DRIFT -000

FILE NO.	SP NO.	REMARKS	FILE NO.	SP NO.	REMARKS
00			50		
01			51		
02			52		
03			53		
04			54		
05			55		
06			56		
07			57		
08			58		
09			59		
10			60		
11			61		
12			62		
13			63		
14			64		
15			65		
16			66		
17			67		
18		U. S. G. S. CONTRACT NO. 14-08-0001-16209	68	2267	LSP 14A
19			269	1001	START OF DOGLEG
20			70		GAINED TWO SHOT
21			71		FROM SAT/NAV.
22			72		
23			73		
24			74		
25			75		
26			76		
27			77	1011	
28			78		
29			79		
30			80		
31			81		
32			82		
33			83		
34			84		
35			85		
36			86		
37			87	1021	NC/MAE @ 1500
38			88		
39			89		
40			90		
41			91		
42			92		
43			93		
44			94		
45			95		
46			96		
47			97	1031	
48			98		
49			99		

YEAR: 1977
DAY: 246
TIME: 07:49:39
TIME 07:49:39 DAY 0246 YEAR 1977
SHIP'S HEADING? 30
** * E R R O R * *
SHIP'S HEADING? 030
AUTO? YES
READY

*RD
LINE NUMBER? 14A_14B
FIRST SHOT POINT? 001001
LAST SHOT POINT? 999999
COUNT INTERVAL? 1
LINE DIRECTION? 029
TAIL BOUY BEARING? MAN
TBB=+000
SHOTS/CLOSURE? 1
WINDOW WIDTH? 99
FIRE OR SKIP? SK
REPORT INTERVAL? 10
WATER DEPTH? FA
BDD WINDOW? 15
ECHO ON PUNCH? NO

U. S. G. S. CONTRACT NO. 14-08-0001-16209

****

TELEDYNE EXPLORATION YEAR 1977
LINE # 14A_14 DAY 0246
PARTY * 705
CLIENT * U.S.G.S.
AREA * CONTRACT NO. 14=08-0001-16209 N.AREA EAST COAST
OPERATOR * A.MCQUEEN

****

R# 129

FILE #000001 PARITY ERRORS 0000 SHOT POINT #001001 TIME 08:11:08
SHIP HEAD 0030 LINE DIRECTION 0029 TBB 0000 DRIFT0001 DEPTH 0041 FA
CD1 54 CD2 55 CD3 50 CD4 49 CD5 38 CD6 45
AGD1 09 AGD2 15 AGD3 16 AGD4 06 AG PRESSURE 1980

**SONOBUOY THROWN OVER AT FIRST S.P.

*SH
SHIP'S HEADING? 27 TBB 180

FILE #000011 PARITY ERRORS 0000 SHOT POINT #001011 TIME 08:14:11
SHIP HEAD 0030 LINE DIRECTION 0029 TBB 0000 DRIFT0001 DEPTH 0000 FA
CD1 56 CD2 53 CD3 50 CD4 50 CD5 40 CD6 47
AGD1 08 AGD2 15 AGD3 16 AGD4 06 AG PRESSURE 1835

**

*TBB
=-000

N.P. 1021

FILE #000021 PARITY ERRORS 0000 SHOT POINT #001021 TIME 08:17:18
SHIP HEAD 0270 LINE DIRECTION 0029 TBB =000 DRIFT0117 DEPTH 0037 FA
CD1 53 CD2 54 CD3 50 CD4 49 CD5 39 CD6 49
AGD1 09 AGD2 15 AGD3 16 AGD4 06 AG PRESSURE 1936

FILE #000031 PARITY ERRORS 0000 SHOT POINT #001031 TIME 08:20:24
SHIP HEAD 0270 LINE DIRECTION 0029 TBB -000 DRIFT0117 DEPTH 0037 FA
CD1 53 CD2 53 CD3 50 CD4 50 CD5 41 CD6 50
AGD1 08 AGD2 15 AGD3 16 AGD4 06 AG PRESSURE 1872

**N.P. 1041

*SH
SHIP'S HEADING? 29
* * E R R O R * *
SHIP'S HEADING? 029

FILE #000041 PARITY ERRORS 0000 SHOT POINT #001041 TIME 08:23:30
SHIP HEAD 0029 LINE DIRECTION 0029 TBB -000 DRIFT-000 DEPTH 0041 FA
  CD1 52 CD2 52 CD3 50 CD4 49 CD5 35 CD6 40
 AGD1 08 AGD2 15 AGD3 16 AGD4 06 AG PRESSURE 1916

**SOR #130 S.P. 1051

FILE #000001 PARITY ERRORS 0000 SHOT POINT #001051 TIME 08:26:40
SHIP HEAD 0029 LINE DIRECTION 0029 TBB -000 DRIFT-000 DEPTH 0038 FA
  CD1 56 CD2 53 CD3 50 CD4 49 CD5 36 CD6 45
 AGD1 08 AGD2 16 AGD3 17 AGD4 15 AG PRESSURE 1916

**NC 1061

*SH
SHIP'S HEADING? 29
* * E R R O R * *
SHIP'S HEADING? 029

FILE #000061 PARITY ERRORS 0000 SHOT POINT #001061 TIME 08:29:52
SHIP HEAD 0029 LINE DIRECTION 0029 TBB -000 DRIFT-000 DEPTH 0038 FA
  CD1 56 CD2 53 CD3 50 CD4 50 CD5 43 CD6 49
 AGD1 09 AGD2 17 AGD3 17 AGD4 14 AG PRESSURE 1916

FILE #000071 PARITY ERRORS 0000 SHOT POINT #001071 TIME 08:32:59
SHIP HEAD 0029 LINE DIRECTION 0029 TBB -002 DRIFT-000 DEPTH 0044 FA
  CD1 55 CD2 52 CD3 50 CD4 50 CD5 44 CD6 48
 AGD1 09 AGD2 16 AGD3 17 AGD4 12 AG PRESSURE 1962

**NC 1081

FILE #000081 PARITY ERRORS 0000 SHOT POINT #001081 TIME 08:36:12
SHIP HEAD 0029 LINE DIRECTION 0029 TBB -000 DRIFT-000 DEPTH 0041 FA
  CD1 52 CD2 52 CD3 50 CD4 49 CD5 44 CD6 46
 AGD1 09 AGD2 16 AGD3 17 AGD4 12 AG PRESSURE 1871

FILE #000091 PARITY ERRORS 0006 SHOT POINT #001091 TIME 08:39:27
SHIP HEAD 0029 LINE DIRECTION 0029 TBB -000 DRIFT-000 DEPTH 0038 FA
  CD1 55 CD2 56 CD3 50 CD4 50 CD5 50 CD6 43
 AGD1 09 AGD2 16 AGD3 17 AGD4 11 AG PRESSURE 1963

**NC 1101

*SH
SHIP'S HEADING? 28
* * E R R O R * *
SHIP'S HEADING? 028

**SOR #131 @ S.P. 1101

FILE #000001 PARITY ERRORS 0000 SHOT POINT #001101 TIME 08:42:45
SHIP HEAD 0028 LINE DIRECTION 0029 TBB -000 DRIFT-003 DEPTH 0042 FA
  CD1 52 CD2 54 CD3 49 CD4 50 CD5 46 CD6 41
 AGD1 10 AGD2 16 AGD3 17 AGD4 11 AG PRESSURE 1947

FILE #000961 PARITY ERRORS 0009 SHOT POINT #001111 TIME 08:46:01
SHIP HEAD 0028 LINE DIRECTION 0029 TBB -000 DRIFT-003 DEPTH 0039 FA
  CD1 54 CD2 56 CD3 49 CD4 49 CD5 32 CD6 40
 AGD1 10 AGD2 16 AGD3 17 AGD4 10 AG PRESSURE 1917

SOR #132 P# 131 Bad Tape

**NC 1121

**

```
*SH
SHIP'S HEADING? 027

FILE #000121  PARITY ERRORS 0000  SHOT POINT #001121  TIME  08:49:23
SHIP HEAD 0027 LINE DIRECTION 0029  TBB -009 DRIFT-004  DEPTH 0043  FA
  CD1 53  CD2 55  CD3 50  CD4 50  CD5 39  CD6 42
 AGD1 10 AGD2 16 AGD3 17 AGD4 10  AG PRESSURE 1962

FILE #000131  PARITY ERRORS 0000  SHOT POINT #001131  TIME  08:52:38
SHIP HEAD 0027 LINE DIRECTION 0029  TBB -009 DRIFT-004  DEPTH 0041  FA
  CD1 52  CD2 56  CD3 49  CD4 49  CD5 41  CD6 40
 AGD1 09 AGD2 16 AGD3 17 AGD4 09  AG PRESSURE 1962

**NC 1141

FILE #000141  PARITY ERRORS 0000  SHOT POINT #001141  TIME  08:55:54
SHIP HEAD 0027 LINE DIRECTION 0029  TBB -009 DRIFT-004  DEPTH 0040  FA
  CD1 52  CD2 56  CD3 49  CD4 50  CD5 35  CD6 41
 AGD1 09 AGD2 16 AGD3 17 AGD4 09  AG PRESSURE 1917

**SOR #133 @ S.P. 1151

FILE #000001  PARITY ERRORS 0000  SHOT POINT #001151  TIME  08:59:08
SHIP HEAD 0027 LINE DIRECTION 0029  TBB -008 DRIFT-004  DEPTH 0039  FA
  CD1 51  CD2 55  CD3 49  CD4 49  CD5 35  CD6 40
 AGD1 09 AGD2 16 AGD3 17 AGD4 09  AG PRESSURE 1950

**NC 1161

FILE #000161  PARITY ERRORS 0000  SHOT POINT #001161  TIME  09:02:24
SHIP HEAD 0027 LINE DIRECTION 0029  TBB -002 DRIFT-004  DEPTH 0045  FA
  CD1 51  CD2 55  CD3 49  CD4 49  CD5 33  CD6 40
 AGD1 09 AGD2 16 AGD3 16 AGD4 08  AG PRESSURE 1917

**

*TBB

=FILE #000171  PARITY ERRORS 0000  SHOT POINT #001171  TIME  09:05:39

SHIP HEAD 0027 LINE DIRECTION 0029  TBB -002 DRIFT-004  DEPTH 0046  FA
* * E R R O R * *
  CD1 53  CD2 54  CD3 49  CD4 50  CD5 35  CD6 41
 AGD1 32 AGD2 32 AGD3 32 AGD4 33  AG PRESSURE 1917
=+000
* * E R R O R * *

*TBB
=+001

**NC 1181

FILE #000181  PARITY ERRORS 0000  SHOT POINT #001181  TIME  09:08:53
SHIP HEAD 0027 LINE DIRECTION 0029  TBB 0001 DRIFT-001  DEPTH 0039  FA
  CD1 53  CD2 56  CD3 49  CD4 49  CD5 35  CD6 43
 AGD1 32 AGD2 32 AGD3 32 AGD4 33  AG PRESSURE 1963

FILE #000191  PARITY ERRORS 0000  SHOT POINT #001191  TIME  09:12:06
SHIP HEAD 0027 LINE DIRECTION 0029  TBB 0001 DRIFT-001  DEPTH 0039  FA
  CD1 53  CD2 56  CD3 49  CD4 49  CD5 36  CD6 45
 AGD1 32 AGD2 32 AGD3 32 AGD4 33  AG PRESSURE 1952

**NC 1201

**SOR #134 @ SP 1201

FILE #000001  PARITY ERRORS 0000  SHOT POINT #001201  TIME  09:15:21
SHIP HEAD 0027 LINE DIRECTION 0029  TBB 0001 DRIFT-001  DEPTH 0038  FA
  CD1 50  CD2 55  CD3 49  CD4 49  CD5 40  CD6 47
 AGD1 32 AGD2 31 AGD3 32 AGD4 33  AG PRESSURE 1920

FILE #000211  PARITY ERRORS 0000  SHOT POINT #001211  TIME  09:18:40
SHIP HEAD 0027 LINE DIRECTION 0029  TBB 0001 DRIFT-001  DEPTH 0043  FA
  CD1 51  CD2 55  CD3 49  CD4 50  CD5 49  CD6 47
 AGD1 32 AGD2 31 AGD3 32 AGD4 33  AG PRESSURE 1917

**NC 1221
```

```
*SH
SHIP'S HEADING? 26

FILE #000221  PARITY ERRORS 0000  SHOT POINT #001221  TIME  09:21:56
SHIP HEAD 0027 LINE DIRECTION 0029  TBB 0001 DRIFT-001  DEPTH 0041  FA
* * E R R O R * *
SHIP'S HEADING?  CD1 51  CD2 55  CD3 49  CD4 49  CD5 45  CD6 47

 AGD1 31 AGD2 31 AGD3 32 AGD4 33  AG PRESSURE 1949

* * E R R O R * *
SHIP'S HEADING? 26
* * E R R O R * *
SHIP'S HEADING? 026

FILE #000231  PARITY ERRORS 0000  SHOT POINT #001231  TIME  09:25:11
SHIP HEAD 0026 LINE DIRECTION 0029  TBB 0001 DRIFT-002  DEPTH 0038  FA
  CD1 52  CD2 55  CD3 49  CD4 49  CD5 42  CD6 48
 AGD1 31 AGD2 30 AGD3 32 AGD4 33  AG PRESSURE 1917

**NC 1241

*SH
SHIP'S HEADING? 025

FILE #000241  PARITY ERRORS 0000  SHOT POINT #001241  TIME  09:28:27
SHIP HEAD 0025 LINE DIRECTION 0029  TBB 0001 DRIFT-003  DEPTH 0039  FA
  CD1 50  CD2 55  CD3 49  CD4 50  CD5 52  CD6 47
 AGD1 31 AGD2 30 AGD3 32 AGD4 33  AG PRESSURE 1951

**SOR #135 @ SP 1251

FILE #000001  PARITY ERRORS 0000  SHOT POINT #001251  TIME  09:31:41
SHIP HEAD 0025 LINE DIRECTION 0029  TBB 0001 DRIFT-003  DEPTH 0040  FA
  CD1 49  CD2 54  CD3 49  CD4 50  CD5 53  CD6 47
 AGD1 31 AGD2 30 AGD3 32 AGD4 33  AG PRESSURE 1952

**NC 1261

FILE #000261  PARITY ERRORS 0000  SHOT POINT #001261  TIME  09:34:55
SHIP HEAD 0025 LINE DIRECTION 0029  TBB 0001 DRIFT-003  DEPTH 0037  FA
  CD1 49  CD2 56  CD3 49  CD4 50  CD5 55  CD6 49
 AGD1 31 AGD2 30 AGD3 31 AGD4 33  AG PRESSURE 1950

*TBB
=+001

FILE #000271  PARITY ERRORS 0000  SHOT POINT #001271  TIME  09:38:11
SHIP HEAD 0025 LINE DIRECTION 0029  TBB 0001 DRIFT-003  DEPTH 0039  FA
  CD1 48  CD2 55  CD3 49  CD4 50  CD5 56  CD6 50
 AGD1 30 AGD2 29 AGD3 31 AGD4 33  AG PRESSURE 1951

**NC 1281

FILE #000281  PARITY ERRORS 0000  SHOT POINT #001281  TIME  09:41:32
SHIP HEAD 0025 LINE DIRECTION 0029  TBB 0001 DRIFT-003  DEPTH 0039  FA
  CD1 50  CD2 55  CD3 49  CD4 50  CD5 63  CD6 49
 AGD1 30 AGD2 29 AGD3 31 AGD4 33  AG PRESSURE 1948

FILE #000291  PARITY ERRORS 0000  SHOT POINT #001291  TIME  09:44:47
SHIP HEAD 0025 LINE DIRECTION 0029  TBB 0001 DRIFT-003  DEPTH 0039  FA
  CD1 48  CD2 55  CD3 48  CD4 49  CD5 53  CD6 47
 AGD1 30 AGD2 29 AGD3 31 AGD4 33  AG PRESSURE 1982

**NC 1301

**SOR #136 @ SP 1301

*SH
SHIP'S HEADING? 027

*TBB
=+001

FILE #000001  PARITY ERRORS 0000  SHOT POINT #001301  TIME  09:48:02
SHIP HEAD 0027 LINE DIRECTION 0029  TBB 0001 DRIFT-001  DEPTH 0041  FA
  CD1 49  CD2 55  CD3 49  CD4 50  CD5 44  CD6 47
 AGD1 30 AGD2 28 AGD3 31 AGD4 33  AG PRESSURE 1982
```

FILE #000311 PARITY ERRORS 0000 SHOT POINT #001311 TIME 09:51:19
SHIP HEAD 0027 LINE DIRECTION 0029 TBB 0001 DRIFT-001 DEPTH 0039 FA
  CD1 47 CD2 54 CD3 48 CD4 49 CD5 52 CD6 50
 AGD1 30 AGD2 28 AGD3 31 AGD4 33 AG PRESSURE 1916

**NC 1321

FILE #000321 PARITY ERRORS 0000 SHOT POINT #001321 TIME 09:54:37
SHIP HEAD 0027 LINE DIRECTION 0029 TBB 0001 DRIFT-001 DEPTH 0041 FA
  CD1 48 CD2 54 CD3 49 CD4 49 CD5 56 CD6 51
 AGD1 29 AGD2 28 AGD3 31 AGD4 33 AG PRESSURE 1997

FILE #000331 PARITY ERRORS 0000 SHOT POINT #001331 TIME 09:57:55
SHIP HEAD 0027 LINE DIRECTION 0029 TBB 0001 DRIFT-001 DEPTH 0039 FA
  CD1 48 CD2 53 CD3 48 CD4 50 CD5 58 CD6 51
 AGD1 27 AGD2 34 AGD3 31 AGD4 33 AG PRESSURE 1995

**NC 13[illegible]

*SH
SHIP'S HEADING? 025

FILE #000341 PARITY ERRORS 0000 SHOT POINT #001341 TIME 10:01:14
SHIP HEAD 0025 LINE DIRECTION 0029 TBB 0001 DRIFT-003 DEPTH 0038 FA
  CD1 46 CD2 54 CD3 48 CD4 49 CD5 56 CD6 49
 AGD1 33 AGD2 34 AGD3 31 AGD4 33 AG PRESSURE 1918

*TBB
=+003

FILE #000351 PARITY ERRORS 0000 SHOT POINT #001351 TIME 10:04:31
SHIP HEAD 0025 LINE DIRECTION 0029 TBB 0003 DRIFT-001 DEPTH 0039 FA
  CD1 46 CD2 52 CD3 48 CD4 49 CD5 40 CD6 42
 AGD1 33 AGD2 33 AGD3 30 AGD4 33 AG PRESSURE 1981

FILE #000361 PARITY ERRORS 0000 SHOT POINT #001361 TIME 10:07:47
SHIP HEAD 0025 LINE DIRECTION 0029 TBB 0003 DRIFT-001 DEPTH 0040 FA
  CD1 46 CD2 53 CD3 48 CD4 49 CD5 41 CD6 42
 AGD1 33 AGD2 33 AGD3 30 AGD4 33 AG PRESSURE 1963

**[illegible] NC 1361

*SH
SHIP'S HEADING? 09
* * E R R O R * *
SHIP'S HEADING? 024

*TBB
=+005

**NC 1381

FILE #000371 PARITY ERRORS 0000 SHOT POINT #001371 TIME 10:11:03
SHIP HEAD 0024 LINE DIRECTION 0029 TBB 0005 DRIFT0000 DEPTH 0041 FA
  CD1 46 CD2 53 CD3 48 CD4 49 CD5 41 CD6 45
 AGD1 33 AGD2 33 AGD3 30 AGD4 33 AG PRESSURE 1982

FILE #000381 PARITY ERRORS 0000 SHOT POINT #001381 TIME 10:14:21
SHIP HEAD 0024 LINE DIRECTION 0029 TBB 0005 DRIFT0000 DEPTH 0041 FA
  CD1 44 CD2 52 CD3 48 CD4 50 CD5 54 CD6 51
 AGD1 32 AGD2 32 AGD3 30 AGD4 33 AG PRESSURE 1931

*SH
SHIP'S HEADING? 026

*TBB
=+004

FILE #000391 PARITY ERRORS 0001 SHOT POINT #001391 TIME 10:17:39
SHIP HEAD 0026 LINE DIRECTION 0029 TBB 0004 DRIFT0001 DEPTH 0040 FA
  CD1 46 CD2 51 CD3 48 CD4 51 CD5 60 CD6 49
 AGD1 32 AGD2 32 AGD3 30 AGD4 33 AG PRESSURE 1885

**NC 1401

FILE #000401 PARITY ERRORS 0000 SHOT POINT #001401 TIME 10:20:58
SHIP HEAD 0026 LINE DIRECTION 0029 TBB 0004 DRIFT0001 DEPTH 0038 FA
  CD1 44 CD2 52 CD3 48 CD4 49 CD5 57 CD6 48
 AGD1 32 AGD2 32 AGD3 30 AGD4 33 AG PRESSURE 1931

*SH
SHIP'S HEADING? 027

*TBB
=+002

FILE #000411 PARITY ERRORS 0000 SHOT POINT #001411 TIME 10:24:18
SHIP HEAD 0027 LINE DIRECTION 0029 TBB 0002 DRIFT0000 DEPTH 0039 FA
  CD1 45 CD2 53 CD3 48 CD4 49 CD5 54 CD6 45
 AGD1 32 AGD2 31 AGD3 30 AGD4 33 AG PRESSURE 1951

**NC 1421

*SH
SHIP'S HEADING? 026

FILE #000421 PARITY ERRORS 0003 SHOT POINT #001421 TIME 10:27:38
SHIP HEAD 0026 LINE DIRECTION 0029 TBB 0002 DRIFT-001 DEPTH 0037 FA
  CD1 43 CD2 53 CD3 49 CD4 49 CD5 51 CD6 48
 AGD1 32 AGD2 31 AGD3 30 AGD4 33 AG PRESSURE 1980

*TBB
=+003

FILE #000431 PARITY ERRORS 0000 SHOT POINT #001431 TIME 10:30:57
SHIP HEAD 0026 LINE DIRECTION 0029 TBB 0003 DRIFT0000 DEPTH 0038 FA
  CD1 43 CD2 53 CD3 49 CD4 49 CD5 48 CD6 46
 AGD1 32 AGD2 31 AGD3 29 AGD4 33 AG PRESSURE 1963

**NC 1441

*SH
SHIP'S HEADING? 027

FILE #000001 PARITY ERRORS 0000 SHOT POINT #001441 TIME 10:34:13
SHIP HEAD 0026 LINE DIRECTION 0029 TBB 0003 DRIFT0000 DEPTH 0040 FA
  CD1 44 CD2 53 CD3 49 CD4 49 CD5 38 CD6 43
 AGD1 31 AGD2 30 AGD3 29 AGD4 33 AG PRESSURE 1956

*TBB
=+004

FILE #000451 PARITY ERRORS 0000 SHOT POINT #001451 TIME 10:37:27
SHIP HEAD 0027 LINE DIRECTION 0029 TBB 0004 DRIFT0002 DEPTH 0041 FA
  CD1 44 CD2 53 CD3 47 CD4 49 CD5 50 CD6 47
 AGD1 31 AGD2 30 AGD3 29 AGD4 33 AG PRESSURE 1936

**NC 1461

*SH

SHIP'S HEADING? FILE #000461 PARITY ERRORS 0000 SHOT POINT #001461 TIME 10:4

SHIP HEAD 0027 LINE DIRECTION 0029 TBB 0004 DRIFT0002 DEPTH 0040 FA

  CD1 43 CD2 54 CD3 48 CD4 50 CD5 55 CD6 47
 AGD1 31 AGD2 30 AGD3 29 AGD4 33 AG PRESSURE 1983
* * E R R O R * *
SHIP'S HEADING? 027

*TBB
=+005

FILE #000471 PARITY ERRORS 0000 SHOT POINT #001471 TIME 10:43:57
SHIP HEAD 0027 LINE DIRECTION 0029 TBB 0005 DRIFT0003 DEPTH 0041 FA
  CD1 43 CD2 52 CD3 49 CD4 50 CD5 51 CD6 47
 AGD1 31 AGD2 29 AGD3 29 AGD4 33 AG PRESSURE 1934

**NC 1481

*SH
SHIP'S HEADING? 029

FILE #000481 PARITY ERRORS 0000 SHOT POINT #001481 TIME 10:47:11
SHIP HEAD 0029 LINE DIRECTION 0029 TBB 0005 DRIFT0005 DEPTH 0041 FA
CD1 42 CD2 52 CD3 49 CD4 50 CD5 54 CD6 46
AGD1 30 AGD2 29 AGD3 29 AGD4 33 AG PRESSURE 1922

*TBB
=+003

**EOR 139 SOR 140

FILE #000001 PARITY ERRORS 0000 SHOT POINT #001491 TIME 10:50:25
SHIP HEAD 0029 LINE DIRECTION 0029 TBB 0003 DRIFT0003 DEPTH 0041 FA
CD1 42 CD2 52 CD3 48 CD4 51 CD5 56 CD6 45
AGD1 30 AGD2 29 AGD3 29 AGD4 33 AG PRESSURE 1968

**NC 1501

*SH
SHIP'S HEADING? 029

FILE #000501 PARITY ERRORS 0000 SHOT POINT #001501 TIME 10:53:38
SHIP HEAD 0029 LINE DIRECTION 0029 TBB 0003 DRIFT0003 DEPTH 0041 FA
CD1 41 CD2 51 CD3 48 CD4 52 CD5 59 CD6 46
AGD1 30 AGD2 29 AGD3 29 AGD4 33 AG PRESSURE 1922

*TBB
=+000

FILE #000511 PARITY ERRORS 0000 SHOT POINT #001511 TIME 10:56:50
SHIP HEAD 0029 LINE DIRECTION 0029 TBB 0000 DRIFT0000 DEPTH 0041 FA
CD1 41 CD2 52 CD3 48 CD4 50 CD5 59 CD6 47
AGD1 30 AGD2 28 AGD3 29 AGD4 33 AG PRESSURE 1958

*NC
* * E R R O R * *

**NC 1521

*SH
SHIP'S HEADING? 026

FILE #000521 PARITY ERRORS 0000 SHOT POINT #001521 TIME 11:00:04
SHIP HEAD 0026 LINE DIRECTION 0029 TBB 0000 DRIFT-003 DEPTH 0040 FA
CD1 41 CD2 53 CD3 48 CD4 50 CD5 57 CD6 47
AGD1 30 AGD2 28 AGD3 29 AGD4 33 AG PRESSURE 1825

*TBB
=+002

**NOISE ON RECORD UNKNOWN

FILE #000531 PARITY ERRORS 0000 SHOT POINT #001531 TIME 11:03:21
SHIP HEAD 0026 LINE DIRECTION 0029 TBB 0002 DRIFT-001 DEPTH 0040 FA
CD1 40 CD2 52 CD3 48 CD4 49 CD5 53 CD6 48
AGD1 30 AGD2 28 AGD3 29 AGD4 33 AG PRESSURE 1729

**NC 1541

*SH
SHIP'S HEADING? 026

EOR 140 SOR 141

FILE #000001 PARITY ERRORS 0000 SHOT POINT #001541 TIME 11:06:37
SHIP HEAD 0026 LINE DIRECTION 0029 TBB 0002 DRIFT-001 DEPTH 0041 FA
CD1 40 CD2 53 CD3 49 CD4 49 CD5 43 CD6 46
AGD1 25 AGD2 35 AGD3 31 AGD4 33 AG PRESSURE 1917

FILE #000551 PARITY ERRORS 0000 SHOT POINT #001551 TIME 11:09:54
SHIP HEAD 0026 LINE DIRECTION 0029 TBB 0002 DRIFT-001 DEPTH 0041 FA
CD1 41 CD2 53 CD3 48 CD4 48 CD5 40 CD6 45
AGD1 31 AGD2 34 AGD3 31 AGD4 33 AG PRESSURE 1950

**NC 1561

*SH
SHIP'S HEADING? 027

FILE #000561 PARITY ERRORS 0000 SHOT POINT #001561 TIME 11:13:11
SHIP HEAD 0027 LINE DIRECTION 0029 TBB 0002 DRIFT0000 DEPTH 0041 FA
CD1 41 CD2 55 CD3 47 CD4 49 CD5 43 CD6 46
AGD1 31 AGD2 34 AGD3 31 AGD4 33 AG PRESSURE 1988

```
*TBB
=+000

FILE #000571  PARITY ERRORS 0000  SHOT POINT #001571  TIME  11:16:25
SHIP HEAD 0027 LINE DIRECTION 0029  TBB 0000 DRIFT-002  DEPTH 0041  FA
  CD1 41  CD2 54  CD3 48  CD4 49  CD5 44  CD6 45
 AGD1 31 AGD2 34 AGD3 31 AGD4 33  AG PRESSURE 1963

**NC 1581

*SH
SHIP'S HEADING? 028

FILE #000581  PARITY ERRORS 0000  SHOT POINT #001581  TIME  11:19:38
SHIP HEAD 0028 LINE DIRECTION 0029  TBB 0000 DRIFT-001  DEPTH 0042  FA
  CD1 40  CD2 54  CD3 48  CD4 48  CD5 41  CD6 46
 AGD1 31 AGD2 34 AGD3 31 AGD4 33  AG PRESSURE 1951

*TBB
=+001

**EOR 141 SOR 142

FILE #000001  PARITY ERRORS 0000  SHOT POINT #001591  TIME  11:22:48
SHIP HEAD 0028 LINE DIRECTION 0029  TBB 0001 DRIFT0000  DEPTH 0041  FA
  CD1 43  CD2 52  CD3 48  CD4 49  CD5 41  CD6 47
 AGD1 31 AGD2 33 AGD3 31 AGD4 33  AG PRESSURE 1917

**NC 1601

*SH
SHIP'S HEADING?
FILE #000601  PARITY ERRORS 0000  SHOT POINT #001601  TIME  11:26:00
SHIP HEAD 0028 LINE DIRECTION 0029  TBB 0001 DRIFT0000  DEPTH 0042  FA
  CD1 43  CD2 54  CD3 48  CD4 49  CD5 38  CD6 47

 AGD1 31 AGD2 33 AGD3 31 AGD4 33  AG PRESSURE 1948
* *[redacted]* *
SHIP'S HEADING? 029

*TBB
=+000

FILE #000611  PARITY ERRORS 0000  SHOT POINT #001611  TIME  11:29:11
SHIP HEAD 0029 LINE DIRECTION 0029  TBB 0000 DRIFT0000  DEPTH 0044  FA
  CD1 44  CD2 54  CD3 48  CD4 49  CD5 41  CD6 48
 AGD1 31 AGD2 33 AGD3 31 AGD4 33  AG PRESSURE 1950

**NC 1621

*SH
SHIP'S HEADING? 029

FILE #000621  PARITY ERRORS 0000  SHOT POINT #001621  TIME  11:32:24
SHIP HEAD 0029 LINE DIRECTION 0029  TBB 0000 DRIFT0000  DEPTH 0041  FA
  CD1 45  CD2 54  CD3 48  CD4 50  CD5 42  CD6 49
 AGD1 30 AGD2 32 AGD3 31 AGD4 33  AG PRESSURE 1951

*TBB
=+000

FILE #000631  PARITY ERRORS 0000  SHOT POINT #001631  TIME  11:35:35
SHIP HEAD 0029 LINE DIRECTION 0029  TBB 0000 DRIFT0000  DEPTH 0041  FA
  CD1 45  CD2 54  CD3 48  CD4 49  CD5 42  CD6 49
 AGD1 30 AGD2 32 AGD3 31 AGD4 33  AG PRESSURE 1917

**EOR 142 SOR 143

**NC 1641

*SS
* *[redacted]* *

*

FILE #000001  PARITY ERRORS 0000  SHOT POINT #001641  TIME  11:38:48
SHIP HEAD 0029 LINE DIRECTION 0029  TBB 0000 DRIFT0000  DEPTH 0041  FA
  CD1 45  CD2 54  CD3 49  CD4 49  CD5 40  CD6 48
 AGD1 30 AGD2 32 AGD3 31 AGD4 33  AG PRESSURE 1918
```

```
*SH
SHIP'S' HEADING?' 028

*TBB
=-001

FILE' #000651' ' PARITY' ERRORS' 0000' ' SHOT' POINT' #001651' ' TIME' ' 11:42:01
SHIP' HEAD' 0028' LINE' DIRECTION' 0029' ' TBB' -001' DRIFT-002' ' DEPTH' 0041' ' FA
' ' CD1' 46' ' CD2' 53' ' CD3' 48' ' CD4' 49' ' CD5' 36' ' CD6' 48' ' ' ' ' ' ' ' ' ' ' ' ' ' ' ' ' ' ' ' ' ' '
' AGD1' 30' AGD2' 31' AGD3' 31' AGD4' 33' ' AG' PRESSURE' 1950' ' ' ' ' ' ' ' ' ' ' ' ' ' ' ' ' ' ' ' ' ' '

**NC' 1661

*SH
SHIP'S' HEADING?' 033

*SH
SHIP'S' HEADING?' 030

FILE' #000661' ' PARITY' ERRORS' 0004' ' SHOT' POINT' #001661' ' TIME' ' 11:45:12
SHIP' HEAD' 0033' LINE' DIRECTION' 0029' ' TBB' -001' DRIFT0003' ' DEPTH' 0038' ' FA
' ' CD1' 45' ' CD2' 53' ' CD3' 48' ' CD4' 49' ' CD5' 30' ' CD6' 47' ' ' ' ' ' ' ' ' ' ' ' ' ' ' ' ' ' ' ' ' ' '
' AGD1' 30' AGD2' 31' AGD3' 31' AGD4' 33' ' AG' PRESSURE' 1917' ' ' ' ' ' ' ' ' ' ' ' ' ' ' ' ' ' ' ' ' ' '

*TBB
=+000

FILE' #000671' ' PARITY' ERRORS' 0000' ' SHOT' POINT' #001671' ' TIME' ' 11:48:22
SHIP' HEAD' 0030' LINE' DIRECTION' 0029' ' TBB' 0000' DRIFT0001' ' DEPTH' 0041' ' FA
' ' CD1' 47' ' CD2' 54' ' CD3' 48' ' CD4' 49' ' CD5' 29' ' CD6' 45' ' ' ' ' ' ' ' ' ' ' ' ' ' ' ' ' ' ' ' ' ' '
' AGD1' 30' AGD2' 30' AGD3' 30' AGD4' 33' ' AG' PRESSURE' 1804' ' ' ' ' ' ' ' ' ' ' ' ' ' ' ' ' ' ' ' ' ' '

**NC' 1681

*SH
SHIP'S' HEADING?' 029

FILE' #000681' ' PARITY' ERRORS' 0000' ' SHOT' POINT' #001681' ' TIME' ' 11:51:34
SHIP' HEAD' 0029' LINE' DIRECTION' 0029' ' TBB' 0000' DRIFT0000' ' DEPTH' 0043' ' FA
' ' CD1' 48' ' CD2' 55' ' CD3' 49' ' CD4' 49' ' CD5' 31' ' CD6' 47' ' ' ' ' ' ' ' ' ' ' ' ' ' ' ' ' ' ' ' ' ' '
' AGD1' 29' AGD2' 30' AGD3' 30' AGD4' 33' ' AG' PRESSURE' 1651' ' ' ' ' ' ' ' ' ' ' ' ' ' ' ' ' ' ' ' ' ' '

*TBB
=-000

**EOR' 143' ' SOR' 144

FILE' #000001' ' PARITY' ERRORS' 0000' ' SHOT' POINT' #001691' ' TIME' ' 11:54:47
SHIP' HEAD' 0029' LINE' DIRECTION' 0029' ' TBB' 0000' DRIFT0000' ' DEPTH' 0039' ' FA
' ' CD1' 49' ' CD2' 54' ' CD3' 49' ' CD4' 49' ' CD5' 33' ' CD6' 48' ' ' ' ' ' ' ' ' ' ' ' ' ' ' ' ' ' ' ' ' ' '
' AGD1' 29' AGD2' 30' AGD3' 30' AGD4' 33' ' AG' PRESSURE' 1885' ' ' ' ' ' ' ' ' ' ' ' ' ' ' ' ' ' ' ' ' ' '

**NC' 1701

*SH
SHIP'S' HEADING?' 031

FILE' #000701' ' PARITY' ERRORS' 0000' ' SHOT' POINT' #001701' ' TIME' ' 11:57:56
SHIP' HEAD' 0031' LINE' DIRECTION' 0029' ' TBB' 0000' DRIFT0002' ' DEPTH' 0039' ' FA
' ' CD1' 49' ' CD2' 53' ' CD3' 49' ' CD4' 49' ' CD5' 32' ' CD6' 47' ' ' ' ' ' ' ' ' ' ' ' ' ' ' ' ' ' ' ' ' ' '
' AGD1' 29' AGD2' 30' AGD3' 30' AGD4' 33' ' AG' PRESSURE' 1885' ' ' ' ' ' ' ' ' ' ' ' ' ' ' ' ' ' ' ' ' ' '

*TBB
=-000

**SHIP' NOISE' ON' RECORD'

FILE' #000711' ' PARITY' ERRORS' 0000' ' SHOT' POINT' #001711' ' TIME' ' 12:01:04
SHIP' HEAD' 0031' LINE' DIRECTION' 0029' ' TBB' 0000' DRIFT0002' ' DEPTH' 0040' ' FA
' ' CD1' 49' ' CD2' 54' ' CD3' 49' ' CD4' 49' ' CD5' 29' ' CD6' 45' ' ' ' ' ' ' ' ' ' ' ' ' ' ' ' ' ' ' ' ' ' '
' AGD1' 29' AGD2' 29' AGD3' 30' AGD4' 33' ' AG' PRESSURE' 1917' ' ' ' ' ' ' ' ' ' ' ' ' ' ' ' ' ' ' ' ' ' '

**NC' 1721'

*SH
SHIP'S' HEADING?' 028
```

FILE #000721 PARITY ERRORS 0000 SHOT POINT #001721 TIME 12:04:14
SHIP HEAD 0028 LINE DIRECTION 0029 TBB 0000 DRIFT-001 DEPTH 0041 FA
CD1 49 CD2 53 CD3 49 CD4 49 CD5 31 CD6 47
AGD1 29 AGD2 29 AGD3 30 AGD4 32 AG PRESSURE 1917

*TBB
=-002

FILE #000731 PARITY ERRORS 0000 SHOT POINT #001731 TIME 12:07:20
SHIP HEAD 0028 LINE DIRECTION 0029 TBB -002 DRIFT-003 DEPTH 0047 FA
CD1 50 CD2 54 CD3 49 CD4 49 CD5 33 CD6 49
AGD1 28 AGD2 29 AGD3 30 AGD4 33 AG PRESSURE 1916

**NC 1741

*EOR 144 SOR 145
* [redacted] *

*SH
SHIP'S HEADING? 027

FILE #000001 PARITY ERRORS 0000 SHOT POINT #001741 TIME 12:10:28
SHIP HEAD 0027 LINE DIRECTION 0029 TBB -002 DRIFT-004 DEPTH 0040 FA
CD1 50 CD2 53 CD3 49 CD4 49 CD5 31 CD6 47
AGD1 28 AGD2 29 AGD3 29 AGD4 33 AG PRESSURE 1918

*TBB
=-002

FILE #000751 PARITY ERRORS 0000 SHOT POINT #001751 TIME 12:13:34
SHIP HEAD 0027 LINE DIRECTION 0029 TBB -002 DRIFT-004 DEPTH 0043 FA
CD1 50 CD2 55 CD3 49 CD4 49 CD5 31 CD6 48
AGD1 28 AGD2 28 AGD3 29 AGD4 33 AG PRESSURE 1917

**NC 1761

*SH
SHIP'S HEADING? 028

*

FILE #000761 PARITY ERRORS 0000 SHOT POINT #001761 TIME 12:16:38
SHIP HEAD 0028 LINE DIRECTION 0029 TBB -002 DRIFT-003 DEPTH 0038 FA
CD1 51 CD2 56 CD3 49 CD4 49 CD5 28 CD6 44
AGD1 28 AGD2 28 AGD3 29 AGD4 33 AG PRESSURE 1885

*TBB
=-002

**SHIP NOISE OFF RECORD

FILE #000771 PARITY ERRORS 0000 SHOT POINT #001771 TIME 12:19:41
SHIP HEAD 0028 LINE DIRECTION 0029 TBB -002 DRIFT-003 DEPTH 0040 FA
CD1 51 CD2 54 CD3 49 CD4 50 CD5 29 CD6 48
AGD1 28 AGD2 28 AGD3 29 AGD4 33 AG PRESSURE 1886

**NC 1781

*SH
SHIP'S HEADING? 028

FILE #000781 PARITY ERRORS 0000 SHOT POINT #001781 TIME 12:22:46
SHIP HEAD 0028 LINE DIRECTION 0029 TBB -002 DRIFT-003 DEPTH 0043 FA
CD1 51 CD2 55 CD3 49 CD4 50 CD5 34 CD6 48
AGD1 32 AGD2 35 AGD3 31 AGD4 33 AG PRESSURE 1885

*TBB
=-003

**EOR 145 SOR 146

FILE #000001 PARITY ERRORS 0000 SHOT POINT #001791 TIME 12:25:49
SHIP HEAD 0028 LINE DIRECTION 0029 TBB -003 DRIFT-004 DEPTH 0044 FA
CD1 51 CD2 54 CD3 49 CD4 49 CD5 37 CD6 50
AGD1 32 AGD2 35 AGD3 31 AGD4 33 AG PRESSURE 1885

**NC 1801

```
*SH
SHIP'S HEADING? 027

FILE #000801  PARITY ERRORS 0002  SHOT POINT #001801  TIME  12:28:50
SHIP HEAD 0027 LINE DIRECTION 0029  TBB -003 DRIFT-005  DEPTH 0042  FA
  CD1 51  CD2 55  CD3 50  CD4 49  CD5 36  CD6 49
 AGD1 32 AGD2 34 AGD3 31 AGD4 33  AG PRESSURE 1854

*TBB
=-002

FILE #000811  PARITY ERRORS 0000  SHOT POINT #001811  TIME  12:31:50
SHIP HEAD 0027 LINE DIRECTION 0029  TBB -002 DRIFT-004  DEPTH 0041  FA
  CD1 54  CD2 54  CD3 49  CD4 49  CD5 33  CD6 49
 AGD1 31 AGD2 34 AGD3 31 AGD4 33  AG PRESSURE 1704

**NC 1821

*SH
SHIP'S HEADING? 027

FILE #000821  PARITY ERRORS 0000  SHOT POINT #001821  TIME  12:34:49
SHIP HEAD 0027 LINE DIRECTION 0029  TBB -002 DRIFT-004  DEPTH 0043  FA
  CD1 51  CD2 54  CD3 49  CD4 49  CD5 29  CD6 48
 AGD1 31 AGD2 34 AGD3 31 AGD4 33  AG PRESSURE 1717

*TBB
=-002

FILE #000831  PARITY ERRORS 0000  SHOT POINT #001831  TIME  12:37:50
SHIP HEAD 0027 LINE DIRECTION 0029  TBB -002 DRIFT-004  DEPTH 0039  FA
  CD1 53  CD2 54  CD3 49  CD4 49  CD5 26  CD6 47
 AGD1 31 AGD2 33 AGD3 31 AGD4 33  AG PRESSURE 1793

**EOR 1841

**EOR 146 SOR 147

**NC 1841

*SH
SHIP'S HEADING? 027

FILE #000001  PARITY ERRORS 0000  SHOT POINT #001841  TIME  12:40:51
SHIP HEAD 0027 LINE DIRECTION 0029  TBB -002 DRIFT-004  DEPTH 0039  FA
  CD1 52  CD2 54  CD3 49  CD4 49  CD5 24  CD6 45
 AGD1 31 AGD2 33 AGD3 31 AGD4 33  AG PRESSURE 1804

*TBB
=-002

FILE #000851  PARITY ERRORS 0010  SHOT POINT #001851  TIME  12:43:51
SHIP HEAD 0027 LINE DIRECTION 0029  TBB -002 DRIFT-004  DEPTH 0038  FA
  CD1 54  CD2 54  CD3 49  CD4 49  CD5 24  CD6 45
 AGD1 31 AGD2 33 AGD3 31 AGD4 33  AG PRESSURE 1891

**NC 1861

*SH
SHIP'S HEADING? 033

FILE #000861  PARITY ERRORS 0000  SHOT POINT #001861  TIME  12:46:51
SHIP HEAD 0033 LINE DIRECTION 0029  TBB -002 DRIFT0002  DEPTH 0038  FA
  CD1 52  CD2 53  CD3 49  CD4 50  CD5 28  CD6 43
 AGD1 31 AGD2 33 AGD3 31 AGD4 33  AG PRESSURE 1824

*TBB
=-005

FILE #000871  PARITY ERRORS 0000  SHOT POINT #001871  TIME  12:49:49
SHIP HEAD 0033 LINE DIRECTION 0029  TBB -005 DRIFT-001  DEPTH 0044  FA
  CD1 52  CD2 55  CD3 49  CD4 49  CD5 33  CD6 46
 AGD1 30 AGD2 32 AGD3 31 AGD4 33  AG PRESSURE 1792

**NC 1881
```

```
*SH
SHIP'S HEADING? 035

FILE #000881  PARITY ERRORS 0000  SHOT POINT #001881  TIME  12:52:47
SHIP HEAD 0035 LINE DIRECTION 0029  TBB -005 DRIFT0001  DEPTH 0039  FA
  CD1 53  CD2 55  CD3 49  CD4 50  CD5 37  CD6 47
 AGD1 30 AGD2 32 AGD3 31 AGD4 33  AG PRESSURE 1631

**EOR 147 SOR 148

FILE #000001  PARITY ERRORS 0000  SHOT POINT #001891  TIME  12:55:44
SHIP HEAD 0035 LINE DIRECTION 0029  TBB -005 DRIFT0001  DEPTH 0042  FA
  CD1 54  CD2 54  CD3 50  CD4 49  CD5 35  CD6 45
 AGD1 30 AGD2 32 AGD3 31 AGD4 33  AG PRESSURE 1735

**NC 1901

*SH
SHIP'S HEADING? 036

FILE #000901  PARITY ERRORS 0000  SHOT POINT #001901  TIME  12:58:41
SHIP HEAD 0036 LINE DIRECTION 0029  TBB -005 DRIFT0002  DEPTH 0042  FA
  CD1 52  CD2 55  CD3 49  CD4 49  CD5 35  CD6 44
 AGD1 30 AGD2 31 AGD3 30 AGD4 33  AG PRESSURE 1761

*TBB
=-005

FILE #000911  PARITY ERRORS 0000  SHOT POINT #001911  TIME  13:01:40
SHIP HEAD 0036 LINE DIRECTION 0029  TBB -005 DRIFT0002  DEPTH 0044  FA
  CD1 54  CD2 54  CD3 50  CD4 50  CD5 34  CD6 44
 AGD1 30 AGD2 31 AGD3 30 AGD4 33  AG PRESSURE 1672

**NC1921

*SH
SHIP'S HEADING? 034

FILE #000921  PARITY ERRORS 0000  SHOT POINT #001921  TIME  13:04:37
SHIP HEAD 0034 LINE DIRECTION 0029  TBB -005 DRIFT0000  DEPTH 0044  FA
  CD1 50  CD2 53  CD3 49  CD4 49  CD5 34  CD6 44
 AGD1 30 AGD2 31 AGD3 30 AGD4 33  AG PRESSURE 1718

*TBB
=-005

FILE #000931  PARITY ERRORS 0000  SHOT POINT #001931  TIME  13:07:36
SHIP HEAD 0034 LINE DIRECTION 0029  TBB -005 DRIFT0000  DEPTH 0044  FA
  CD1 50  CD2 54  CD3 49  CD4 49  CD5 34  CD6 47
 AGD1 29 AGD2 30 AGD3 30 AGD4 33  AG PRESSURE 1762

**EOR 148 SOR 149

**NC 1941

FILE #000001  PARITY ERRORS 0000  SHOT POINT #001941  TIME  13:10:34
SHIP HEAD 0034 LINE DIRECTION 0029  TBB -005 DRIFT0000  DEPTH 0046  FA
  CD1 51  CD2 55  CD3 49  CD4 49  CD5 38  CD6 50
 AGD1 29 AGD2 30 AGD3 30 AGD4 33  AG PRESSURE 1763

*SH
SHIP'S HEADING? 034

*[redacted]
[redacted]
*  *  [redacted]  *
=-005

FILE #000951  PARITY ERRORS 0000  SHOT POINT #001951  TIME  13:13:31
SHIP HEAD 0034 LINE DIRECTION 0029  TBB -005 DRIFT0000  DEPTH 0046  FA
  CD1 53  CD2 54  CD3 49  CD4 50  CD5 38  CD6 46
 AGD1 29 AGD2 30 AGD3 30 AGD4 33  AG PRESSURE 1735

**NC 1961

*SH
SHIP'S HEADING? 033
```

```
FILE #000961  PARITY ERRORS 0000  SHOT POINT #001961  TIME  13:16:39
SHIP HEAD 0033 LINE DIRECTION 0029  TBB -005 DRIFT-001  DEPTH 0044  FA
  CD1 50  CD2 52  CD3 49  CD4 49  CD5 34  CD6 49
 AGD1 29 AGD2 30 AGD3 30 AGD4 33  AG PRESSURE 1693

*TBB
=-000

FILE #000971  PARITY ERRORS 0000  SHOT POINT #001971  TIME  13:19:50
SHIP HEAD 0033 LINE DIRECTION 0029  TBB 0000 DRIFT0004  DEPTH 0044  FA
  CD1 48  CD2 53  CD3 49  CD4 50  CD5 41  CD6 51
 AGD1 29 AGD2 29 AGD3 30 AGD4 33  AG PRESSURE 1922

**NC 1981

*SH
SHIP'S HEADING? 032

*

FILE #000981  PARITY ERRORS 0000  SHOT POINT #001981  TIME  13:23:00
SHIP HEAD 0032 LINE DIRECTION 0029  TBB 0000 DRIFT0003  DEPTH 0045  FA
  CD1 51  CD2 53  CD3 49  CD4 49  CD5 32  CD6 46
 AGD1 29 AGD2 29 AGD3 30 AGD4 33  AG PRESSURE 1924

*TBB
=-000

**EOR 149  SOR 150

FILE #000001  PARITY ERRORS 0000  SHOT POINT #001991  TIME  13:26:13
SHIP HEAD 0032 LINE DIRECTION 0029  TBB 0000 DRIFT0003  DEPTH 0044  FA
  CD1 49  CD2 54  CD3 49  CD4 49  CD5 34  CD6 48
 AGD1 28 AGD2 29 AGD3 29 AGD4 33  AG PRESSURE 1936

**NC 2001

*SH
SHIP'S HEADING? 032

FILE #000002  PARITY ERRORS 0000  SHOT POINT #002001  TIME  13:29:23
SHIP HEAD 0032 LINE DIRECTION 0029  TBB 0000 DRIFT0003  DEPTH 0043  FA
  CD1 48  CD2 53  CD3 49  CD4 50  CD5 31  CD6 49
 AGD1 28 AGD2 29 AGD3 29 AGD4 33  AG PRESSURE 1890

**TBB-00

*TBB
=-000

FILE #000012  PARITY ERRORS 0000  SHOT POINT #002011  TIME  13:32:30
SHIP HEAD 0032 LINE DIRECTION 0029  TBB 0000 DRIFT0003  DEPTH 0043  FA
  CD1 50  CD2 53  CD3 50  CD4 49  CD5 26  CD6 47
 AGD1 28 AGD2 28 AGD3 29 AGD4 33  AG PRESSURE 1827

**NC 2021

*SH
SHIP'S HEADING? 032

FILE #000022  PARITY ERRORS 0000  SHOT POINT #002021  TIME  13:35:42
SHIP HEAD 0032 LINE DIRECTION 0029  TBB 0000 DRIFT0003  DEPTH 0052  FA
  CD1 48  CD2 53  CD3 49  CD4 49  CD5 25  CD6 49
 AGD1 28 AGD2 28 AGD3 29 AGD4 33  AG PRESSURE 1891

*TBB
=+002

FILE #000032  PARITY ERRORS 0000  SHOT POINT #002031  TIME  13:38:52
SHIP HEAD 0032 LINE DIRECTION 0029  TBB 0002 DRIFT0005  DEPTH 0043  FA
  CD1 47  CD2 54  CD3 49  CD4 49  CD5 35  CD6 48
 AGD1 28 AGD2 28 AGD3 29 AGD4 33  AG PRESSURE 1922

**EOR 150  SOR 151

**NC 2041
```

[redacted]

FILE #000001 PARITY ERRORS 0000 SHOT POINT #002041 TIME 13:42:03
SHIP HEAD 0032 LINE DIRECTION 0029 TBB 0002 DRIFT0005 DEPTH 0043 FA
CD1 46 CD2 55 CD3 49 CD4 49 CD5 27 CD6 47
AGD1 28 AGD2 28 AGD3 29 AGD4 33 AG PRESSURE 1933

*SH
SHIP'S HEADING? 033

*TBB
=+002

FILE #000052 PARITY ERRORS 0000 SHOT POINT #002051 TIME 13:45:12
SHIP HEAD 0033 LINE DIRECTION 0029 TBB 0002 DRIFT0006 DEPTH 0042 FA
CD1 49 CD2 54 CD3 49 CD4 50 CD5 31 CD6 48
AGD1 30 AGD2 33 AGD3 29 AGD4 33 AG PRESSURE 1919

**NC 2061

*SH
SHIP'S HEADING? 033

FILE #000062 PARITY ERRORS 0000 SHOT POINT #002061 TIME 13:48:20
SHIP HEAD 0033 LINE DIRECTION 0029 TBB 0002 DRIFT0006 DEPTH 0044 FA
CD1 48 CD2 55 CD3 49 CD4 49 CD5 33 CD6 48
AGD1 30 AGD2 33 AGD3 29 AGD4 33 AG PRESSURE 1916

*TBB
=-000

FILE #000072 PARITY ERRORS 0000 SHOT POINT #002071 TIME 13:51:33
SHIP HEAD 0033 LINE DIRECTION 0029 TBB 0000 DRIFT0004 DEPTH 0042 FA
CD1 48 CD2 55 CD3 49 CD4 49 CD5 32 CD6 50
AGD1 29 AGD2 33 AGD3 29 AGD4 33 AG PRESSURE 1922

**NC 2081

*SH
SHIP'S HEADING? 031

FILE #000082 PARITY ERRORS 0000 SHOT POINT #002081 TIME 13:54:44
SHIP HEAD 0031 LINE DIRECTION 0029 TBB 0000 DRIFT0002 DEPTH 0041 FA
CD1 48 CD2 53 CD3 49 CD4 50 CD5 38 CD6 48
AGD1 29 AGD2 33 AGD3 29 AGD4 33 AG PRESSURE 1922

*TBB
=-000

**EOR 151 SOR 152

FILE #000001 PARITY ERRORS 0000 SHOT POINT #002091 TIME 13:57:55
SHIP HEAD 0031 LINE DIRECTION 0029 TBB 0000 DRIFT0002 DEPTH 0040 FA
CD1 47 CD2 52 CD3 51 CD4 51 CD5 24 CD6 56
AGD1 29 AGD2 31 AGD3 28 AGD4 33 AG PRESSURE 1999

**NC 2101

*SH
SHIP'S HEADING? 031

FILE #000102 PARITY ERRORS 0000 SHOT POINT #002101 TIME 14:01:07
SHIP HEAD 0031 LINE DIRECTION 0029 TBB 0000 DRIFT0002 DEPTH 0043 FA
CD1 47 CD2 54 CD3 48 CD4 49 CD5 29 CD6 47
AGD1 29 AGD2 32 AGD3 28 AGD4 33 AG PRESSURE 1923

*TBB
=-000

FILE #000112 PARITY ERRORS 0000 SHOT POINT #002111 TIME 14:04:18
SHIP HEAD 0031 LINE DIRECTION 0029 TBB 0000 DRIFT0002 DEPTH 0040 FA
CD1 48 CD2 55 CD3 48 CD4 49 CD5 26 CD6 46
AGD1 29 AGD2 32 AGD3 28 AGD4 33 AG PRESSURE 1701

```
**NC 2121

*SH
SHIP'S HEADING? 032

FILE #000122  PARITY ERRORS 0000  SHOT POINT #002121  TIME  14:07:28
SHIP HEAD 0032 LINE DIRECTION 0029  TBB 0000 DRIFT0003  DEPTH 0038  FA
  CD1 46  CD2 55  CD3 50  CD4 49  CD5 26  CD6 45
 AGD1 29 AGD2 31 AGD3 28 AGD4 33  AG PRESSURE 1890

*TBB
=-000

FILE #000132  PARITY ERRORS 0000  SHOT POINT #002131  TIME  14:10:39
SHIP HEAD 0032 LINE DIRECTION 0029  TBB 0000 DRIFT0003  DEPTH 0042  FA
  CD1 48  CD2 55  CD3 48  CD4 49  CD5 30  CD6 48
 AGD1 28 AGD2 31 AGD3 28 AGD4 33  AG PRESSURE 1922

**EOR 152 SOR 153

**NC 2141

*SH
SHIP'S HEADING? 033

FILE #000001  PARITY ERRORS 0000  SHOT POINT #002141  TIME  14:13:48
SHIP HEAD 0033 LINE DIRECTION 0029  TBB 0000 DRIFT0004  DEPTH 0039  FA
  CD1 47  CD2 55  CD3 48  CD4 49  CD5 32  CD6 47
 AGD1 28 AGD2 31 AGD3 28 AGD4 33  AG PRESSURE 1892

*TBB-000
=-000

FILE #000152  PARITY ERRORS 0012  SHOT POINT #002151  TIME  14:16:58
SHIP HEAD 0033 LINE DIRECTION 0029  TBB 0000 DRIFT0004  DEPTH 0039  FA
  CD1 45  CD2 55  CD3 48  CD4 49  CD5 34  CD6 47
 AGD1 28 AGD2 30 AGD3 28 AGD4 33  AG PRESSURE 1891

**NC 2161

*SH
SHIP'S HEADING? 033

FILE #000162  PARITY ERRORS 0000  SHOT POINT #002161  TIME  14:20:10
SHIP HEAD 0033 LINE DIRECTION 0029  TBB 0000 DRIFT0004  DEPTH 0041  FA
  CD1 45  CD2 55  CD3 49  CD4 49  CD5 34  CD6 49
 AGD1 28 AGD2 30 AGD3 28 AGD4 33  AG PRESSURE 1955

*TBB-
=-000

FILE #000172  PARITY ERRORS 0000  SHOT POINT #002171  TIME  14:23:22
SHIP HEAD 0033 LINE DIRECTION 0029  TBB 0000 DRIFT0004  DEPTH 0040  FA
  CD1 45  CD2 53  CD3 48  CD4 50  CD5 41  CD6 47
 AGD1 28 AGD2 30 AGD3 28 AGD4 33  AG PRESSURE 1890

**NC 2181

*SH
SHIP'S HEADING? 033

FILE #000182  PARITY ERRORS 0000  SHOT POINT #002181  TIME  14:26:32
SHIP HEAD 0033 LINE DIRECTION 0029  TBB 0000 DRIFT0004  DEPTH 0046  FA
  CD1 45  CD2 56  CD3 49  CD4 49  CD5 35  CD6 48
 AGD1 28 AGD2 30 AGD3 28 AGD4 33  AG PRESSURE 1924

*TBB
=-000

**EOR 153 SOR 154

FILE #000001  PARITY ERRORS 0000  SHOT POINT #002191  TIME  14:29:42
SHIP HEAD 0033 LINE DIRECTION 0029  TBB 0000 DRIFT0004  DEPTH 0040  FA
  CD1 48  CD2 55  CD3 48  CD4 50  CD5 35  CD6 46
 AGD1 28 AGD2 29 AGD3 27 AGD4 33  AG PRESSURE 1922

**2201

**NC  2201
```

```
*SH
SHIP'S' HEADING?' 034

FILE' #000202' ' PARITY' ERRORS' 0000' ' SHOT' POINT' #002201' ' TIME' ' 14:32:50
SHIP' HEAD' 0034' LINE' DIRECTION' 0029' ' TBB' 0000' DRIFT0005' ' DEPTH' 0040' ' FA
' ' CD1' 44' ' CD2' 52' ' CD3' 48' ' CD4' 48' ' CD5' 27' ' CD6' 43' ........................
' AGD1' 27' AGD2' 29' AGD3' 27' AGD4' 33' ' AG' PRESSURE' 1896' .....................

*TBB
=-000

FILE' #000212' ' PARITY' ERRORS' 0000' ' SHOT' POINT' #002211' ' TIME' ' 14:35:59
SHIP' HEAD' 0034' LINE' DIRECTION' 0029' ' TBB' 0000' DRIFT0005' ' DEPTH' 0047' ' FA
' ' CD1' 44' ' CD2' 54' ' CD3' 49' ' CD4' 49' ' CD5' 46' ' CD6' 44' ........................
' AGD1' 27' AGD2' 29' AGD3' 27' AGD4' 33' ' AG' PRESSURE' 1781' .....................

**NC' 2221

*SH
SHIP'S' HEADING?' 038

*

FILE' #000222' ' PARITY' ERRORS' 0000' ' SHOT' POINT' #002221' ' TIME' ' 14:39:06
SHIP' HEAD' 0038' LINE' DIRECTION' 0029' ' TBB' 0000' DRIFT0009' ' DEPTH' 0041' ' FA
' ' CD1' 46' ' CD2' 56' ' CD3' 49' ' CD4' 50' ' CD5' 56' ' CD6' 45' ........................
' AGD1' 27' AGD2' 29' AGD3' 27' AGD4' 33' ' AG' PRESSURE' 1858' .....................

FILE' #000232' ' PARITY' ERRORS' 0000' ' SHOT' POINT' #002231' ' TIME' ' 14:42:14
SHIP' HEAD' 0038' LINE' DIRECTION' 0029' ' TBB' 0000' DRIFT0009' ' DEPTH' 0041' ' FA
' ' CD1' 44' ' CD2' 50' ' CD3' 48' ' CD4' 49' ' CD5' 58' ' CD6' 48' ........................
' AGD1' 27' AGD2' 28' AGD3' 27' AGD4' 33' ' AG' PRESSURE' 1923' .....................

**EOR' 154' SOR' 155'

**NC' 2141

FILE' #000001' ' PARITY' ERRORS' 0000' ' SHOT' POINT' #002241' ' TIME' ' 14:45:22
SHIP' HEAD' 0038' LINE' DIRECTION' 0029' ' TBB' 0000' DRIFT0009' ' DEPTH' 0041' ' FA
' ' CD1' 44' ' CD2' 54' ' CD3' 48' ' CD4' 50' ' CD5' 65' ' CD6' 48' ........................
' AGD1' 27' AGD2' 28' AGD3' 27' AGD4' 33' ' AG' PRESSURE' 1735' .....................

*TBB
=-003

*CS
=
* *[redacted]* *
=!!!

* *[redacted]* *
=000
* *[redacted] *

FILE' #000252' ' PARITY' ERRORS' 0000' ' SHOT' POINT' #002251' ' TIME' ' 14:48:30
=SHIP' HEAD' 0038' LINE' DIRECTION' 0029' ' TBB' -003' DRIFT0006' ' DEPTH' 0040' ' FA
' ' CD1' 47' ' CD2' 53' ' CD3' 48' ' CD4' 49' ' CD5' 55' ' CD6' 47' ........................

' AGD1' 27' AGD2' 28' AGD3' 27' AGD4' 33' ' AG' PRESSURE' 1735' .....................
* *[redacted] *
=000
* * E' R' R' O' R' * *
=002255

*LSP
=002267

**NC' 2261

*SH
SHIP'S' HEADING?' 036

FILE' #000262' ' PARITY' ERRORS' 0000' ' SHOT' POINT' #002261' ' TIME' ' 14:51:38
SHIP' HEAD' 0036' LINE' DIRECTION' 0029' ' TBB' -003' DRIFT0004' ' DEPTH' 0039' ' FA
' ' CD1' 44' ' CD2' 57' ' CD3' 49' ' CD4' 49' ' CD5' 49' ' CD6' 46' ........................
' AGD1' 26' AGD2' 28' AGD3' 27' AGD4' 33' ' AG' PRESSURE' 1890' .....................
```

```
**START OF DOG LEG

**LSP 2267



*
* * E R R O R * *

*
* * E R R O R * *

*RU
LINE NUMBER? 00014B
FIRST SHOT POINT? 001041
LAST SHOT POINT? 999999
COUNT INTERVAL? 1
LINE DIRECTION? 047
TAIL BOUY BEARING? MAN
TBB=-000
SHOTS/CLOSURE? 1
WINDOW WIDTH? 99
FIRE OR SKIP? SK
REPORT INTERVAL? 10
WATER DEPTH? FA
BDD WINDOW? 15
ECHO ON PUNCH? NO
*****************************************************************************

                    TELEDYNE EXPLORATION                    YEAR 1977
                    LINE # 00014B  DAY 0246
PARTY    * 705
CLIENT   * U.S.G.S.
AREA     * CONTRACT NO. 14-08 -0001-16209-  N.AREA EAST COAST
OPERATOR * GB


*****************************************************************************
X

FILE #000307  PARITY ERRORS 0000  SHOT POINT #001041  TIME  15:06:03
SHIP HEAD 0036 LINE DIRECTION 0047  TBB 0000 DRIFT-011  DEPTH 0040  FA
  CD1 44  CD2 54  CD3 48  CD4 49  CD5 51  CD6 43
 AGD1 26 AGD2 26 AGD3 26 AGD4 33  AG PRESSURE 1876
READY

*SH
SHIP'S HEADING? 052

*TBB
=-015

FILE #000001  PARITY ERRORS 0000  SHOT POINT #001051  TIME  15:09:26
SHIP HEAD 0052 LINE DIRECTION 0047  TBB -015 DRIFT-010  DEPTH 0039  FA
  CD1 46  CD2 53  CD3 49  CD4 49  CD5 57  CD6 45
 AGD1 26 AGD2 26 AGD3 26 AGD4 33  AG PRESSURE 1923

**EOR 156 SOR 157

**NC 1061
```

FILE #000327 PARITY ERRORS 0000 SHOT POINT #001061 TIME 15:12:28
SHIP HEAD 0052 LINE DIRECTION 0047 TBB -015 DRIFT-010 DEPTH 0039 FA
CD1 47 CD2 54 CD3 49 CD4 49 CD5 63 CD6 46
AGD1 28 AGD2 26 AGD3 26 AGD4 33 AG PRESSURE 1891

*SH
SHIP'S HEADING? 055

*TBB
=-012

FILE #000337 PARITY ERRORS 0000 SHOT POINT #001071 TIME 15:15:34
SHIP HEAD 0055 LINE DIRECTION 0047 TBB -012 DRIFT-004 DEPTH 0039 FA
CD1 46 CD2 53 CD3 49 CD4 49 CD5 63 CD6 45
AGD1 33 AGD2 33 AGD3 31 AGD4 33 AG PRESSURE 1891

*

**NC 1081

FILE #000347 PARITY ERRORS 0000 SHOT POINT #001081 TIME 15:18:45
SHIP HEAD 0055 LINE DIRECTION 0047 TBB -012 DRIFT-004 DEPTH 0038 FA
CD1 48 CD2 54 CD3 49 CD4 49 CD5 63 CD6 48
AGD1 33 AGD2 33 AGD3 31 AGD4 33 AG PRESSURE 1718

*SHO
SHIP'S HEADING? 054

*TBB
=-008

FILE #000357 PARITY ERRORS 0000 SHOT POINT #001091 TIME 15:21:54
SHIP HEAD 0054 LINE DIRECTION 0047 TBB -008 DRIFT-001 DEPTH 0040 FA
CD1 47 CD2 54 CD3 49 CD4 49 CD5 63 CD6 46
AGD1 32 AGD2 32 AGD3 31 AGD4 33 AG PRESSURE 1922

**EOR 157 SOR 158

**NC 1101

FILE #000001 PARITY ERRORS 0000 SHOT POINT #001101 TIME 15:25:03
SHIP HEAD 0054 LINE DIRECTION 0047 TBB -008 DRIFT-001 DEPTH 0037 FA
CD1 49 CD2 54 CD3 49 CD4 49 CD5 63 CD6 48
AGD1 32 AGD2 32 AGD3 31 AGD4 33 AG PRESSURE 1891

*SH
SHIP'S HEADING? 053

*TBB
=-003

FILE #000377 PARITY ERRORS 0000 SHOT POINT #001111 TIME 15:28:08
SHIP HEAD 0053 LINE DIRECTION 0047 TBB -003 DRIFT0003 DEPTH 0040 FA
CD1 47 CD2 54 CD3 49 CD4 49 CD5 61 CD6 47
AGD1 32 AGD2 32 AGD3 31 AGD4 33 AG PRESSURE 1890

**NC/MR 1121

FILE #000387 PARITY ERRORS 0000 SHOT POINT #001121 TIME 15:31:15
SHIP HEAD 0053 LINE DIRECTION 0047 TBB -003 DRIFT0003 DEPTH 0042 FA
CD1 50 CD2 53 CD3 48 CD4 49 CD5 59 CD6 48
AGD1 32 AGD2 31 AGD3 31 AGD4 33 AG PRESSURE 1891

*SH
SHIP'S HEADING? 053

*TBB
=-002

FILE #000397 PARITY ERRORS 0000 SHOT POINT #001131 TIME 15:34:21
SHIP HEAD 0053 LINE DIRECTION 0047 TBB -002 DRIFT0004 DEPTH 0039 FA
CD1 47 CD2 55 CD3 48 CD4 49 CD5 53 CD6 47
AGD1 32 AGD2 31 AGD3 31 AGD4 33 AG PRESSURE 1778

```
**NC/MR 1141

*SH
SHIP'S HEADING? 051

FILE #000407  PARITY ERRORS 0000  SHOT POINT #001141  TIME  15:37:27
SHIP HEAD 0051 LINE DIRECTION 0047  TBB -002 DRIFT0002  DEPTH 0039  FA
  CD1 49  CD2 54  CD3 48  CD4 49  CD5 47  CD6 47
 AGD1 32 AGD2 31 AGD3 31 AGD4 33  AG PRESSURE 1877

**EOR 158 SOR 159

FILE #000001  PARITY ERRORS 0000  SHOT POINT #001151  TIME  15:40:33
SHIP HEAD 0051 LINE DIRECTION 0047  TBB -002 DRIFT0002  DEPTH 0040  FA
  CD1 48  CD2 54  CD3 49  CD4 49  CD5 50  CD6 47
 AGD1 31 AGD2 30 AGD3 31 AGD4 33  AG PRESSURE 1892

**NC/MR 1161

*SH
SHIP'S HEADING? 051

FILE #000427  PARITY ERRORS 0000  SHOT POINT #001161  TIME  15:43:34
SHIP HEAD 0051 LINE DIRECTION 0047  TBB -002 DRIFT0002  DEPTH 0041  FA
  CD1 49  CD2 55  CD3 49  CD4 49  CD5 51  CD6 45
 AGD1 31 AGD2 30 AGD3 31 AGD4 33  AG PRESSURE 1826

*TBB
=-001

FILE #000437  PARITY ERRORS 0000  SHOT POINT #001171  TIME  15:46:26
SHIP HEAD 0051 LINE DIRECTION 0047  TBB -001 DRIFT0003  DEPTH 0039  FA
  CD1 50  CD2 55  CD3 49  CD4 49  CD5 46  CD6 43
 AGD1 31 AGD2 30 AGD3 31 AGD4 33  AG PRESSURE 1695

**NC/MR 1181

*SH
SHIP'S HEADING? 052
EPC: Turned on @ S.P. 1181
FILE #000447  PARITY ERRORS 0000  SHOT POINT #001181  TIME  15:49:16
SHIP HEAD 0052 LINE DIRECTION 0047  TBB -001 DRIFT0004  DEPTH 0040  FA
  CD1 48  CD2 55  CD3 48  CD4 49  CD5 46  CD6 44
 AGD1 31 AGD2 30 AGD3 31 AGD4 33  AG PRESSURE 1734

*TBB
=-001

FILE #000457  PARITY ERRORS 0000  SHOT POINT #001191  TIME  15:52:08
SHIP HEAD 0052 LINE DIRECTION 0047  TBB -001 DRIFT0004  DEPTH 0040  FA
  CD1 49  CD2 55  CD3 48  CD4 49  CD5 46  CD6 44
 AGD1 31 AGD2 29 AGD3 31 AGD4 33  AG PRESSURE 1736

**NC 1201

**SOR #160 @ SP 1201

FILE #000001  PARITY ERRORS 0000  SHOT POINT #001201  TIME  15:54:58
SHIP HEAD 0052 LINE DIRECTION 0047  TBB -001 DRIFT0004  DEPTH 0040  FA
  CD1 50  CD2 56  CD3 49  CD4 49  CD5 46  CD6 47
 AGD1 31 AGD2 29 AGD3 31 AGD4 33  AG PRESSURE 1762

FILE #000477  PARITY ERRORS 0000  SHOT POINT #001211  TIME  15:57:57
SHIP HEAD 0052 LINE DIRECTION 0047  TBB -001 DRIFT0004  DEPTH 0040  FA
  CD1 49  CD2 55  CD3 49  CD4 49  CD5 48  CD6 48
 AGD1 31 AGD2 33 AGD3 31 AGD4 28  AG PRESSURE 1859

**NC 1221

FILE #000487  PARITY ERRORS 0000  SHOT POINT #001221  TIME  16:00:58
SHIP HEAD 0052 LINE DIRECTION 0047  TBB -001 DRIFT0004  DEPTH 0040  FA
  CD1 48  CD2 55  CD3 49  CD4 49  CD5 53  CD6 49
 AGD1 31 AGD2 33 AGD3 31 AGD4 30  AG PRESSURE 1890

FILE #000497  PARITY ERRORS 0000  SHOT POINT #001231  TIME  16:04:00
SHIP HEAD 0052 LINE DIRECTION 0047  TBB -001 DRIFT0004  DEPTH 0041  FA
  CD1 49  CD2 53  CD3 49  CD4 49  CD5 49  CD6 48
 AGD1 30 AGD2 32 AGD3 31 AGD4 30  AG PRESSURE 1906
```

```
**NC 1241

*SH
SHIP'S HEADING? 051

*TBB
=000
* * E R R O R * *
=+000

FILE #000507  PARITY ERRORS 0000  SHOT POINT #001241  TIME  16:07:00
SHIP HEAD 0051 LINE DIRECTION 0047  TBB 0000 DRIFT0004  DEPTH 0040  FA
  CD1 49  CD2 53  CD3 49  CD4 49  CD5 49  CD6 47
 AGD1 30 AGD2 32 AGD3 30 AGD4 30  AG PRESSURE 1891

**SOR #161 @ SP 1251

FILE #000001  PARITY ERRORS 0000  SHOT POINT #001251  TIME  16:10:02
SHIP HEAD 0051 LINE DIRECTION 0047  TBB 0000 DRIFT0004  DEPTH 0040  FA
  CD1 48  CD2 54  CD3 49  CD4 49  CD5 49  CD6 47
 AGD1 30 AGD2 32 AGD3 30 AGD4 30  AG PRESSURE 1357

**NC 1261

**#3 GUN OUT (4X REPLACEMENT)

FILE #000527  PARITY ERRORS 0000  SHOT POINT #001261  TIME  16:13:02
SHIP HEAD 0051 LINE DIRECTION 0047  TBB 0000 DRIFT0004  DEPTH 0039  FA
  CD1 49  CD2 53  CD3 49  CD4 49  CD5 55  CD6 49
 AGD1 30 AGD2 31 AGD3 30 AGD4 30  AG PRESSURE 1956

FILE #000537  PARITY ERRORS 0000  SHOT POINT #001271  TIME  16:16:04
SHIP HEAD 0051 LINE DIRECTION 0047  TBB 0000 DRIFT0004  DEPTH 0040  FA
  CD1 48  CD2 54  CD3 49  CD4 49  CD5 55  CD6 49
 AGD1 30 AGD2 31 AGD3 30 AGD4 30  AG PRESSURE 1988

**NC 1281

*SH
SHIP'S HEADING? 050

FILE #000547  PARITY ERRORS 0002  SHOT POINT #001281  TIME  16:19:08
SHIP HEAD 0050 LINE DIRECTION 0047  TBB 0000 DRIFT0003  DEPTH 0038  FA
  CD1 50  CD2 55  CD3 49  CD4 49  CD5 59  CD6 51
 AGD1 30 AGD2 31 AGD3 30 AGD4 30  AG PRESSURE 1892

FILE #000557  PARITY ERRORS 0000  SHOT POINT #001291  TIME  16:22:13
SHIP HEAD 0050 LINE DIRECTION 0047  TBB 0000 DRIFT0003  DEPTH 0040  FA
  CD1 50  CD2 54  CD3 49  CD4 49  CD5 61  CD6 50
 AGD1 30 AGD2 30 AGD3 30 AGD4 30  AG PRESSURE 1827

**NC 1301

**SOR #162 @ SP 1301

FILE #000001  PARITY ERRORS 0000  SHOT POINT #001301  TIME  16:25:16
SHIP HEAD 0050 LINE DIRECTION 0047  TBB 0000 DRIFT0002  DEPTH 0041  FA
  CD1 49  CD2 54  CD3 49  CD4 49  CD5 60  CD6 50
 AGD1 30 AGD2 30 AGD3 30 AGD4 30  AG PRESSURE 1763

FILE #000577  PARITY ERRORS 0000  SHOT POINT #001311  TIME  16:28:18
SHIP HEAD 0050 LINE DIRECTION 0047  TBB 0000 DRIFT0003  DEPTH 0041  FA
  CD1 49  CD2 54  CD3 49  CD4 49  CD5 59  CD6 48
 AGD1 29 AGD2 30 AGD3 30 AGD4 30  AG PRESSURE 1926

**NC 1321

*SH
SHIP'S HEADING? 049

*SH
SHIP'S HEADING? 049

FILE #000587  PARITY ERRORS 0000  SHOT POINT #001321  TIME  16:31:19
SHIP HEAD 0049 LINE DIRECTION 0047  TBB 0000 DRIFT0002  DEPTH 0042  FA
  CD1 49  CD2 54  CD3 49  CD4 49  CD5 59  CD6 49
 AGD1 29 AGD2 30 AGD3 30 AGD4 30  AG PRESSURE 1859
```

FILE #000597 PARITY ERRORS 0000 SHOT POINT #001331 TIME 18:34:21
SHIP HEAD 0049 LINE DIRECTION 0047 TBB 0000 DRIFT0002 DEPTH 0041 FA
CD1 49 CD2 55 CD3 49 CD4 48 CD5 49 CD6 48
AGD1 29 AGD2 29 AGD3 29 AGD4 30 AG PRESSURE 1846

**NC 1341

*SH
SHIP'S HEADING? 048

FILE #000607 PARITY ERRORS 0000 SHOT POINT #001341 TIME 16:37:22
SHIP HEAD 0048 LINE DIRECTION 0047 TBB 0000 DRIFT0001 DEPTH 0042 FA
CD1 50 CD2 53 CD3 49 CD4 48 CD5 41 CD6 48
AGD1 29 AGD2 29 AGD3 29 AGD4 30 AG PRESSURE 1762

**SOR #163 @ SP 1351

FILE #000001 PARITY ERRORS 0000 SHOT POINT #001351 TIME 16:40:24
SHIP HEAD 0048 LINE DIRECTION 0047 TBB 0000 DRIFT0001 DEPTH 0041 FA
CD1 49 CD2 53 CD3 49 CD4 48 CD5 41 CD6 47
AGD1 29 AGD2 29 AGD3 29 AGD4 30 AG PRESSURE 1826

*SE
YEAR: 1977
DAY: 246
TIME: 1642
* * E R R O R * *
TIME: ~~15:45:00~~
TIME ~~15:45:00~~ DAY 0246 YEAR 1977

**NC 1361

FILE #000627 PARITY ERRORS 0000 SHOT POINT #001361 TIME 13:43:41
SHIP HEAD 0048 LINE DIRECTION 0047 TBB 0000 DRIFT0001 DEPTH 0040 FA
CD1 49 CD2 52 CD3 49 CD4 49 CD5 47 CD6 49
AGD1 28 AGD2 29 AGD3 29 AGD4 30 AG PRESSURE 1891

*SE
YEAR: 1977
DAY: 246
TIME: 16:45:00
TIME 16:45:00 DAY 0246 YEAR 1977

FILE #000637 PARITY ERRORS 0000 SHOT POINT #001371 TIME 16:46:43
SHIP HEAD 0048 LINE DIRECTION 0047 TBB 0000 DRIFT0001 DEPTH 0039 FA
CD1 50 CD2 54 CD3 49 CD4 49 CD5 47 CD6 49
AGD1 28 AGD2 28 AGD3 29 AGD4 30 AG PRESSURE 1861

**NC 1381

*SH
SHIP'S HEADING? 047

*TBB
=+002

FILE #000647 PARITY ERRORS 0000 SHOT POINT #001381 TIME 16:49:43
SHIP HEAD 0047 LINE DIRECTION 0047 TBB 0002 DRIFT0002 DEPTH 0041 FA
CD1 48 CD2 52 CD3 49 CD4 49 CD5 50 CD6 51
AGD1 28 AGD2 28 AGD3 29 AGD4 30 AG PRESSURE 1826

**

*SH
SHIP'S HEADING? 044

FILE #000657 PARITY ERRORS 0000 SHOT POINT #001391 TIME 16:52:43
SHIP HEAD 0044 LINE DIRECTION 0047 TBB 0002 DRIFT-001 DEPTH 0039 FA
CD1 48 CD2 52 CD3 49 CD4 49 CD5 50 CD6 48
AGD1 28 AGD2 28 AGD3 29 AGD4 30 AG PRESSURE 1840

**NC 1401

**SOR #164 @ SP 1401

**SONO BUOY OUT ON SP 1401

#3 gun on

```
FILE #000001  PARITY ERRORS 0000  SHOT POINT #001401  TIME  16:55:44
SHIP HEAD 0044 LINE DIRECTION 0047  TBB 0002 DRIFT-001  DEPTH 0040  FA
  CD1 48  CD2 52  CD3 49  CD4 49  CD5 47  CD6 51
 AGD1 28 AGD2 28 AGD3 29 AGD4 30  AG PRESSURE 1780

FILE #000677  PARITY ERRORS 0000  SHOT POINT #001411  TIME  16:58:45
SHIP HEAD 0044 LINE DIRECTION 0047  TBB 0002 DRIFT-001  DEPTH 0040  FA
  CD1 48  CD2 52  CD3 49  CD4 49  CD5 52  CD6 51
 AGD1 28 AGD2 27 AGD3 29 AGD4 30  AG PRESSURE 1822

**1421 NC

FILE #000687  PARITY ERRORS 0000  SHOT POINT #001421  TIME  17:01:44
SHIP HEAD 0044 LINE DIRECTION 0047  TBB 0002 DRIFT-001  DEPTH 0041  FA
  CD1 47  CD2 52  CD3 48  CD4 49  CD5 52  CD6 50
 AGD1 28 AGD2 27 AGD3 29 AGD4 30  AG PRESSURE 1818

*SH
SHIP'S HEADING? 044

FILE #000697  PARITY ERRORS 0000  SHOT POINT #001431  TIME  17:04:41
SHIP HEAD 0044 LINE DIRECTION 0047  TBB 0002 DRIFT-001  DEPTH 0040  FA
  CD1 47  CD2 52  CD3 48  CD4 48  CD5 49  CD6 49
 AGD1 28 AGD2 27 AGD3 29 AGD4 30  AG PRESSURE 1816

**NC 1441

FILE #000707  PARITY ERRORS 0000  SHOT POINT #001441  TIME  17:07:37
SHIP HEAD 0044 LINE DIRECTION 0047  TBB 0002 DRIFT-001  DEPTH 0039  FA
  CD1 48  CD2 53  CD3 49  CD4 49  CD5 49  CD6 48
 AGD1 27 AGD2 26 AGD3 29 AGD4 30  AG PRESSURE 1758

**SOR #165 @ SP 1451

FILE #000001  PARITY ERRORS 0000  SHOT POINT #001451  TIME  17:10:34
SHIP HEAD 0044 LINE DIRECTION 0047  TBB 0002 DRIFT-001  DEPTH 0043  FA
  CD1 49  CD2 53  CD3 48  CD4 49  CD5 47  CD6 48
 AGD1 32 AGD2 34 AGD3 32 AGD4 32  AG PRESSURE 1749

**NC 1461

FILE #000727  PARITY ERRORS 0000  SHOT POINT #001461  TIME  17:13:31
SHIP HEAD 0044 LINE DIRECTION 0047  TBB 0002 DRIFT-001  DEPTH 0041  FA
  CD1 46  CD2 52  CD3 48  CD4 49  CD5 46  CD6 48
 AGD1 32 AGD2 34 AGD3 32 AGD4 32  AG PRESSURE 1806

FILE #000737  PARITY ERRORS 0000  SHOT POINT #001471  TIME  17:16:27
SHIP HEAD 0044 LINE DIRECTION 0047  TBB 0002 DRIFT-001  DEPTH 0042  FA
  CD1 45  CD2 52  CD3 48  CD4 49  CD5 47  CD6 48
 AGD1 32 AGD2 34 AGD3 32 AGD4 32  AG PRESSURE 1852

**NC 1481

FILE #000747  PARITY ERRORS 0000  SHOT POINT #001481  TIME  17:19:23
SHIP HEAD 0044 LINE DIRECTION 0047  TBB 0002 DRIFT-001  DEPTH 0041  FA
  CD1 49  CD2 51  CD3 48  CD4 49  CD5 48  CD6 48
 AGD1 31 AGD2 34 AGD3 31 AGD4 32  AG PRESSURE 1787

FILE #000757  PARITY ERRORS 0000  SHOT POINT #001491  TIME  17:22:20
SHIP HEAD 0044 LINE DIRECTION 0047  TBB 0002 DRIFT-001  DEPTH 0041  FA
  CD1 48  CD2 52  CD3 48  CD4 49  CD5 49  CD6 49
 AGD1 31 AGD2 33 AGD3 31 AGD4 32  AG PRESSURE 1884

**NC 1501

**SOR #166 @ SP 1501

FILE #000001  PARITY ERRORS 0000  SHOT POINT #001501  TIME  17:25:16
SHIP HEAD 0044 LINE DIRECTION 0047  TBB 0002 DRIFT-001  DEPTH 0041  FA
  CD1 47  CD2 52  CD3 48  CD4 49  CD5 49  CD6 50
 AGD1 31 AGD2 33 AGD3 31 AGD4 32  AG PRESSURE 1793

FILE #000777  PARITY ERRORS 0000  SHOT POINT #001511  TIME  17:28:12
SHIP HEAD 0044 LINE DIRECTION 0047  TBB 0002 DRIFT-001  DEPTH 0038  FA
  CD1 46  CD2 51  CD3 48  CD4 49  CD5 50  CD6 51
 AGD1 31 AGD2 33 AGD3 31 AGD4 32  AG PRESSURE 1820

**NC 1521
```

*SH046
SHIP'S HEADING? 046

*TBB
=_
* * E R R O R * *
=-002

FILE #000787 PARITY ERRORS 0000 SHOT POINT #001521 TIME 17:31:06
SHIP HEAD 0046 LINE DIRECTION 0047 TBB -002 DRIFT-003 DEPTH 0039 FA
CD1 46 CD2 51 CD3 48 CD4 50 CD5 54 CD6 51
AGD1 31 AGD2 32 AGD3 31 AGD4 32 AG PRESSURE 1788

FILE #000797 PARITY ERRORS 0000 SHOT POINT #001531 TIME 17:34:08
SHIP HEAD 0046 LINE DIRECTION 0047 TBB -002 DRIFT-003 DEPTH 0039 FA
CD1 45 CD2 52 CD3 48 CD4 49 CD5 56 CD6 54
AGD1 31 AGD2 32 AGD3 31 AGD4 32 AG PRESSURE 1886

**NC 1541

FILE #000807 PARITY ERRORS 0000 SHOT POINT #001541 TIME 17:37:09
SHIP HEAD 0046 LINE DIRECTION 0047 TBB -002 DRIFT-003 DEPTH 0039 FA
CD1 44 CD2 51 CD3 49 CD4 49 CD5 55 CD6 49
AGD1 30 AGD2 32 AGD3 31 AGD4 32 AG PRESSURE 1916

*SH
SHIP'S HEADING? 048

**SOR #167 @ SP 1551

FILE #000001 PARITY ERRORS 0000 SHOT POINT #001551 TIME 17:40:14
SHIP HEAD 0048 LINE DIRECTION 0047 TBB -002 DRIFT-001 DEPTH 0040 FA
CD1 44 CD2 51 CD3 48 CD4 48 CD5 55 CD6 52
AGD1 30 AGD2 31 AGD3 31 AGD4 32 AG PRESSURE 1918

**NC 1561

FILE #000827 PARITY ERRORS 0000 SHOT POINT #001561 TIME 17:43:16
SHIP HEAD 0048 LINE DIRECTION 0047 TBB -002 DRIFT-001 DEPTH 0041 FA
CD1 46 CD2 51 CD3 48 CD4 49 CD5 54 CD6 51
AGD1 30 AGD2 31 AGD3 31 AGD4 32 AG PRESSURE 1888

FILE #000837 PARITY ERRORS 0000 SHOT POINT #001571 TIME 17:46:17
SHIP HEAD 0048 LINE DIRECTION 0047 TBB -002 DRIFT-001 DEPTH 0041 FA
CD1 44 CD2 51 CD3 48 CD4 49 CD5 54 CD6 50
AGD1 30 AGD2 31 AGD3 31 AGD4 32 AG PRESSURE 1886

** SP 1569 SONOBUOY REPLACES CHANNEL 48

**NC 1581

*SH
SHIP'S HEADING? 046

FILE #000847 PARITY ERRORS 0000 SHOT POINT #001581 TIME 17:49:20
SHIP HEAD 0046 LINE DIRECTION 0047 TBB -002 DRIFT-003 DEPTH 0040 FA
CD1 44 CD2 52 CD3 48 CD4 48 CD5 52 CD6 51
AGD1 30 AGD2 30 AGD3 31 AGD4 32 AG PRESSURE 1886

FILE #000857 PARITY ERRORS 0000 SHOT POINT #001591 TIME 17:52:25
SHIP HEAD 0046 LINE DIRECTION 0047 TBB -002 DRIFT-003 DEPTH 0040 FA
CD1 46 CD2 54 CD3 48 CD4 48 CD5 51 CD6 50
AGD1 30 AGD2 30 AGD3 31 AGD4 32 AG PRESSURE 1920

*SH
SHIP'S HEADING? 046

*SOR #168 @ SP 1601
* * E R R O R * *

**NC 1601

FILE #000001 PARITY ERRORS 0000 SHOT POINT #001601 TIME 17:55:33
SHIP HEAD 0046 LINE DIRECTION 0047 TBB -002 DRIFT-003 DEPTH 0042 FA
CD1 46 CD2 51 CD3 48 CD4 48 CD5 47 CD6 49
AGD1 29 AGD2 30 AGD3 31 AGD4 32 AG PRESSURE 1887

FILE #000877 PARITY ERRORS 0000 SHOT POINT #001611 TIME 17:58:39
SHIP HEAD 0046 LINE DIRECTION 0047 TBB -002 DRIFT-003 DEPTH 0039 FA
CD1 43 CD2 50 CD3 48 CD4 49 CD5 48 CD6 51
AGD1 29 AGD2 30 AGD3 30 AGD4 32 AG PRESSURE 1920

**NC 1621

*TBB
=_
[redacted]
=

FILE #000887 PARITY ERRORS 0000 SHOT POINT #001621 TIME 18:01:45
SHIP HEAD 0046 LINE DIRECTION 0047 TBB -002 DRIFT-003 DEPTH 0040 FA
* * E R R O R * *
CD1 46 CD2 51 CD3 49 CD4 49 CD5 48 CD6 50
AGD1 29 AGD2 30 AGD3 30 AGD4 32 AG PRESSURE 1730
=0
[redacted]
=_
[redacted]
[redacted]

*TBB
=-002

FILE #000897 PARITY ERRORS 0000 SHOT POINT #001631 TIME 18:04:50
SHIP HEAD 0046 LINE DIRECTION 0047 TBB -002 DRIFT-003 DEPTH 0041 FA
CD1 45 CD2 53 CD3 48 CD4 49 CD5 48 CD6 52
AGD1 29 AGD2 29 AGD3 30 AGD4 32 AG PRESSURE 1886

**NC 1641

FILE #000907 PARITY ERRORS 0000 SHOT POINT #001641 TIME 18:07:55
SHIP HEAD 0046 LINE DIRECTION 0047 TBB -002 DRIFT-003 DEPTH 0040 FA
CD1 41 CD2 52 CD3 49 CD4 49 CD5 48 CD6 52
AGD1 29 AGD2 29 AGD3 30 AGD4 32 AG PRESSURE 1887

**SOR #169 9SP 1651

*SH
SHIP'S HEADING? 048

FILE #000001 PARITY ERRORS 0000 SHOT POINT #001651 TIME 18:10:59
SHIP HEAD 0048 LINE DIRECTION 0047 TBB -002 DRIFT-001 DEPTH 0049 FA
CD1 45 CD2 51 CD3 48 CD4 49 CD5 51 CD6 52
AGD1 29 AGD2 29 AGD3 30 AGD4 32 AG PRESSURE 1920

** FILE 917 BAD FILE LOST #1 GENERATOR

**NC 1661

*SH
SHIP'S HEADING? 049

FILE #000987 PARITY ERRORS 0000 SHOT POINT #001661 TIME 18:14:02
SHIP HEAD 0049 LINE DIRECTION 0047 TBB -002 DRIFT0000 DEPTH 0041 FA
CD1 42 CD2 52 CD3 48 CD4 49 CD5 54 CD6 53
AGD1 28 AGD2 29 AGD3 30 AGD4 32 AG PRESSURE 1886

FILE #000937 PARITY ERRORS 0000 SHOT POINT #001671 TIME 18:17:07
SHIP HEAD 0049 LINE DIRECTION 0047 TBB -002 DRIFT0000 DEPTH 0041 FA
CD1 43 CD2 54 CD3 48 CD4 49 CD5 57 CD6 53
AGD1 28 AGD2 28 AGD3 30 AGD4 32 AG PRESSURE 1918

**NC 1681

FILE #000947 PARITY ERRORS 0000 SHOT POINT #001681 TIME 18:20:13
SHIP HEAD 0049 LINE DIRECTION 0047 TBB -002 DRIFT0000 DEPTH 0041 FA
CD1 44 CD2 53 CD3 48 CD4 49 CD5 58 CD6 53
AGD1 28 AGD2 28 AGD3 30 AGD4 32 AG PRESSURE 1919

FILE #000957 PARITY ERRORS 0000 SHOT POINT #001691 TIME 18:23:18
SHIP HEAD 0049 LINE DIRECTION 0047 TBB -002 DRIFT0000 DEPTH 0041 FA
CD1 44 CD2 53 CD3 49 CD4 50 CD5 58 CD6 53
AGD1 28 AGD2 28 AGD3 30 AGD4 32 AG PRESSURE 1893

**NC 1701

**SOR #179 @ SP 1701

FILE #000001 PARITY ERRORS 0000 SHOT POINT #001701 TIME 18:26:25
SHIP HEAD 0049 LINE DIRECTION 0047 TBB -002 DRIFT0000 DEPTH 0041 FA
CD1 45 CD2 54 CD3 48 CD4 49 CD5 58 CD6 53
AGD1 28 AGD2 28 AGD3 30 AGD4 32 AG PRESSURE 1788

FILE #000977 PARITY ERRORS 0000 SHOT POINT #001711 TIME 18:29:30
SHIP HEAD 0049 LINE DIRECTION 0047 TBB -002 DRIFT0000 DEPTH 0040 FA
CD1 47 CD2 54 CD3 48 CD4 49 CD5 57 CD6 52
AGD1 16 AGD2 22 AGD3 22 AGD4 55 AG PRESSURE 1921

**NC 1721

FILE #000987 PARITY ERRORS 0000 SHOT POINT #001721 TIME 18:32:38
SHIP HEAD 0049 LINE DIRECTION 0047 TBB -002 DRIFT0000 DEPTH 0041 FA
CD1 45 CD2 53 CD3 48 CD4 49 CD5 56 CD6 51
AGD1 31 AGD2 35 AGD3 31 AGD4 32 AG PRESSURE 1887

FILE #000997 PARITY ERRORS 0000 SHOT POINT #001731 TIME 18:35:46
SHIP HEAD 0049 LINE DIRECTION 0047 TBB -002 DRIFT0000 DEPTH 0041 FA
CD1 47 CD2 52 CD3 48 CD4 49 CD5 52 CD6 51
AGD1 31 AGD2 34 AGD3 31 AGD4 32 AG PRESSURE 1921

**NC 1741

*SH
SHIP'S HEADING? 048

FILE #000008 PARITY ERRORS 0000 SHOT POINT #001741 TIME 18:38:55
SHIP HEAD 0048 LINE DIRECTION 0047 TBB -002 DRIFT-001 DEPTH 0040 FA
CD1 45 CD2 53 CD3 48 CD4 48 CD5 51 CD6 51
AGD1 31 AGD2 34 AGD3 31 AGD4 32 AG PRESSURE 1919

**SOR #171 @ SP 1751

FILE #000001 PARITY ERRORS 0000 SHOT POINT #001751 TIME 18:42:03
SHIP HEAD 0048 LINE DIRECTION 0047 TBB -002 DRIFT-001 DEPTH 0041 FA
CD1 47 CD2 53 CD3 48 CD4 48 CD5 49 CD6 50
AGD1 31 AGD2 34 AGD3 31 AGD4 32 AG PRESSURE 1919

**NC 1761

*TBB
=-003

FILE #000028 PARITY ERRORS 0000 SHOT POINT #001761 TIME 18:45:09
SHIP HEAD 0048 LINE DIRECTION 0047 TBB -003 DRIFT-002 DEPTH 0041 FA
CD1 46 CD2 53 CD3 48 CD4 49 CD5 45 CD6 49
AGD1 31 AGD2 33 AGD3 31 AGD4 32 AG PRESSURE 1886

FILE #000038 PARITY ERRORS 0000 SHOT POINT #001771 TIME 18:48:15
SHIP HEAD 0048 LINE DIRECTION 0047 TBB -003 DRIFT-002 DEPTH 0041 FA
CD1 47 CD2 53 CD3 49 CD4 48 CD5 40 CD6 48
AGD1 30 AGD2 33 AGD3 31 AGD4 32 AG PRESSURE 1933

**NC 1781

FILE #000048 PARITY ERRORS 0000 SHOT POINT #001781 TIME 18:51:19
SHIP HEAD 0048 LINE DIRECTION 0047 TBB -003 DRIFT-002 DEPTH 0042 FA
CD1 48 CD2 53 CD3 49 CD4 49 CD5 45 CD6 49
AGD1 30 AGD2 33 AGD3 31 AGD4 32 AG PRESSURE 1680

FILE #000058 PARITY ERRORS 0000 SHOT POINT #001791 TIME 18:54:25
SHIP HEAD 0048 LINE DIRECTION 0047 TBB -003 DRIFT-002 DEPTH 0041 FA
CD1 48 CD2 52 CD3 49 CD4 49 CD5 48 CD6 48
AGD1 30 AGD2 33 AGD3 31 AGD4 32 AG PRESSURE 1857

**NC 1801

```
*SH
SHIP'S HEADING? 050

**SOR #172 @SP 1801

FILE #000001  PARITY ERRORS 0000  SHOT POINT #001801  TIME  18:57:30
SHIP HEAD 0050 LINE DIRECTION 0047  TBB -003 DRIFT0000  DEPTH 0043  FA
  CD1 49  CD2 52  CD3 48  CD4 49  CD5 48  CD6 48
 AGD1 30 AGD2 32 AGD3 31 AGD4 32  AG PRESSURE 1891

FILE #000078  PARITY ERRORS 0000  SHOT POINT #001811  TIME  19:00:34
SHIP HEAD 0050 LINE DIRECTION 0047  TBB -003 DRIFT0000  DEPTH 0042  FA
  CD1 48  CD2 52  CD3 49  CD4 49  CD5 48  CD6 48
 AGD1 30 AGD2 32 AGD3 31 AGD4 32  AG PRESSURE 1922

**NC 1821

FILE #000088  PARITY ERRORS 0000  SHOT POINT #001821  TIME  19:03:41
SHIP HEAD 0050 LINE DIRECTION 0047  TBB -003 DRIFT0000  DEPTH 0043  FA
  CD1 49  CD2 52  CD3 48  CD4 49  CD5 48  CD6 50
 AGD1 30 AGD2 32 AGD3 31 AGD4 32  AG PRESSURE 1889

FILE #000098  PARITY ERRORS 0000  SHOT POINT #001831  TIME  19:06:47
SHIP HEAD 0050 LINE DIRECTION 0047  TBB -003 DRIFT0000  DEPTH 0042  FA
  CD1 48  CD2 53  CD3 49  CD4 49  CD5 52  CD6 50
 AGD1 30 AGD2 31 AGD3 31 AGD4 32  AG PRESSURE 1921

**NC 1841

FILE #000108  PARITY ERRORS 0000  SHOT POINT #001841  TIME  19:09:54
SHIP HEAD 0050 LINE DIRECTION 0047  TBB -003 DRIFT0000  DEPTH 0042  FA
  CD1 51  CD2 53  CD3 49  CD4 49  CD5 50  CD6 48
 AGD1 29 AGD2 31 AGD3 30 AGD4 32  AG PRESSURE 1953

**SOR #173 @ SP 1851

FILE #000001  PARITY ERRORS 0000  SHOT POINT #001851  TIME  19:12:59
SHIP HEAD 0050 LINE DIRECTION 0047  TBB -003 DRIFT0000  DEPTH 0042  FA
  CD1 49  CD2 54  CD3 49  CD4 49  CD5 49  CD6 49
 AGD1 29 AGD2 31 AGD3 30 AGD4 32  AG PRESSURE 1921

**NC 1861

FILE #000128  PARITY ERRORS 0000  SHOT POINT #001861  TIME  19:16:05
SHIP HEAD 0050 LINE DIRECTION 0047  TBB -003 DRIFT0000  DEPTH 0042  FA
  CD1 53  CD2 53  CD3 49  CD4 49  CD5 48  CD6 50
 AGD1 29 AGD2 30 AGD3 30 AGD4 32  AG PRESSURE 1922

FILE #000138  PARITY ERRORS 0000  SHOT POINT #001871  TIME  19:19:15
SHIP HEAD 0050 LINE DIRECTION 0047  TBB -003 DRIFT0000  DEPTH 0042  FA
  CD1 50  CD2 53  CD3 49  CD4 49  CD5 47  CD6 49
 AGD1 29 AGD2 30 AGD3 30 AGD4 32  AG PRESSURE 1824

**NC 1881

*SH
SHIP'S HEADING? 048

FILE #000148  PARITY ERRORS 0000  SHOT POINT #001881  TIME  19:22:25
SHIP HEAD 0048 LINE DIRECTION 0047  TBB -003 DRIFT-002  DEPTH 0045  FA
  CD1 51  CD2 54  CD3 49  CD4 49  CD5 45  CD6 50
 AGD1 29 AGD2 30 AGD3 30 AGD4 32  AG PRESSURE 1936

FILE #000158  PARITY ERRORS 0000  SHOT POINT #001891  TIME  19:25:36
SHIP HEAD 0048 LINE DIRECTION 0047  TBB -003 DRIFT-002  DEPTH 0043  FA
  CD1 53  CD2 53  CD3 49  CD4 49  CD5 41  CD6 48
 AGD1 28 AGD2 30 AGD3 30 AGD4 32  AG PRESSURE 1922

**NC 1901

**SOR #174 @ SP 1901

*TBB
=-002

FILE #000001  PARITY ERRORS 0000  SHOT POINT #001901  TIME  19:28:46
SHIP HEAD 0048 LINE DIRECTION 0047  TBB -002 DRIFT-001  DEPTH 0043  FA
  CD1 50  CD2 53  CD3 49  CD4 49  CD5 41  CD6 47
 AGD1 28 AGD2 29 AG[illegible]0 AGD4 32  AG PRESSURE 1922
```

FILE #000178 PARITY ERRORS 0000 SHOT POINT #001911 TIME 19:31:55
SHIP HEAD 0048 LINE DIRECTION 0047 TBB -002 DRIFT-001 DEPTH 0053 FA
CD1 53 CD2 52 CD3 49 CD4 49 CD5 45 CD6 51
AGD1 28 AGD2 29 AGD3 30 AGD4 32 AG PRESSURE 1914

**NC 1921

FILE #000188 PARITY ERRORS 0000 SHOT POINT #001921 TIME 19:35:03
SHIP HEAD 0048 LINE DIRECTION 0047 TBB -002 DRIFT-001 DEPTH 0046 FA
CD1 51 CD2 53 CD3 49 CD4 49 CD5 50 CD6 52
AGD1 28 AGD2 29 AGD3 30 AGD4 32 AG PRESSURE 1909

FILE #000198 PARITY ERRORS 0000 SHOT POINT #001931 TIME 19:38:13
SHIP HEAD 0048 LINE DIRECTION 0047 TBB -002 DRIFT-001 DEPTH 0045 FA
CD1 53 CD2 53 CD3 50 CD4 49 CD5 49 CD6 49
AGD1 28 AGD2 29 AGD3 29 AGD4 32 AG PRESSURE 1922

**NC 1941

FILE #000208 PARITY ERRORS 0000 SHOT POINT #001941 TIME 19:41:24
SHIP HEAD 0048 LINE DIRECTION 0047 TBB -002 DRIFT-001 DEPTH 0044 FA
CD1 52 CD2 54 CD3 49 CD4 48 CD5 46 CD6 49
AGD1 32 AGD2 33 AGD3 32 AGD4 32 AG PRESSURE 1954

**SOR #175 @ SP 1954

**NC 1961

Lost S.P.
3 S.P. 1951 1952 1953

FILE #000230 PARITY ERRORS 0000 SHOT POINT #001965 TIME 19:49:31
SHIP HEAD 0048 LINE DIRECTION 0047 TBB -002 DRIFT-001 DEPTH 0044 FA
CD1 51 CD2 54 CD3 50 CD4 49 CD5 46 CD6 49
AGD1 32 AGD2 33 AGD3 32 AGD4 32 AG PRESSURE 1925

*CS
=001975

FILE #000238 PARITY ERRORS 0000 SHOT POINT #001973 TIME 19:51:59
SHIP HEAD 0048 LINE DIRECTION 0047 TBB -002 DRIFT-001 DEPTH 0045 FA
CD1 52 CD2 52 CD3 49 CD4 49 CD5 45 CD6 50
AGD1 32 AGD2 32 AGD3 32 AGD4 32 AG PRESSURE 1922

**NC 1981

FILE #000248 PARITY ERRORS 0000 SHOT POINT #001984 TIME 19:55:12
SHIP HEAD 0048 LINE DIRECTION 0047 TBB -002 DRIFT-001 DEPTH 0046 FA
CD1 54 CD2 54 CD3 50 CD4 49 CD5 45 CD6 50
AGD1 32 AGD2 32 AGD3 32 AGD4 32 AG PRESSURE 1761

FILE #000258 PARITY ERRORS 0000 SHOT POINT #001994 TIME 19:58:25
SHIP HEAD 0048 LINE DIRECTION 0047 TBB -002 DRIFT-001 DEPTH 0046 FA
CD1 54 CD2 52 CD3 49 CD4 49 CD5 45 CD6 50
AGD1 32 AGD2 32 AGD3 31 AGD4 32 AG PRESSURE 1957

**NC 2001

*SH
SHIP'S HEADING? 051

**SOR #176 SP 2001

FILE #000268 PARITY ERRORS 0000 SHOT POINT #002004 TIME 20:01:42
SHIP HEAD 0051 LINE DIRECTION 0047 TBB -002 DRIFT0002 DEPTH 0046 FA
CD1 51 CD2 51 CD3 50 CD4 49 CD5 44 CD6 49
AGD1 31 AGD2 31 AGD3 31 AGD4 32 AG PRESSURE 1986

FILE #000278 PARITY ERRORS 0000 SHOT POINT #002014 TIME 20:04:56
SHIP HEAD 0051 LINE DIRECTION 0047 TBB -002 DRIFT0002 DEPTH 0046 FA
CD1 55 CD2 52 CD3 49 CD4 49 CD5 47 CD6 50
AGD1 31 AGD2 31 AGD3 31 AGD4 32 AG PRESSURE 1955

++NC 2021

FILE #000288** PARITY ERRORS 0000 SHOT POINT #002024 TIME 20:08:10
SHIP HEAD 0051 LINE DIRECTION 0047 TBB -002 DRIFT0002 DEPTH 0046 FA
CD1 56 CD2 53 CD3 50 CD4 49 CD5 47 CD6 50
AGD1 31 AGD2 30 AGD3 31 AGD4 32 AG PRESSURE 1956

FILE #000298 PARITY ERRORS 0000 SHOT POINT #002034 TIME 20:11:26
SHIP HEAD 0051 LINE DIRECTION 0047 TBB -002 DRIFT0002 DEPTH 0046 FA
CD1 52 CD2 54 CD3 49 CD4 49 CD5 47 CD6 48
AGD1 31 AGD2 30 AGD3 31 AGD4 32 AG PRESSURE 1969

++NC 2041

+SH
SHIP'S HEADING? 052

FILE #000308 PARITY ERRORS 0000 SHOT POINT #002044 TIME 20:14:40
SHIP HEAD 0052 LINE DIRECTION 0047 TBB -002 DRIFT0003 DEPTH 0046 FA
CD1 52 CD2 53 CD3 50 CD4 49 CD5 44 CD6 49
AGD1 31 AGD2 30 AGD3 31 AGD4 32 AG PRESSURE 1957

++SHIP NOISE ON RECORD

++SOR #177 @ SP 2051

FILE #000318 PARITY ERRORS 0000 SHOT POINT #002054 TIME 20:17:53
SHIP HEAD 0052 LINE DIRECTION 0047 TBB -002 DRIFT0003 DEPTH 0046 FA
CD1 56 CD2 54 CD3 50 CD4 49 CD5 42 CD6 47
AGD1 30 AGD2 30 AGD3 31 AGD4 32 AG PRESSURE 1936

++NC 2061

FILE #000328 PARITY ERRORS 0000 SHOT POINT #002064 TIME 20:21:05
SHIP HEAD 0052 LINE DIRECTION 0047 TBB -002 DRIFT0003 DEPTH 0046 FA
CD1 55 CD2 53 CD3 49 CD4 49 CD5 42 CD6 48
AGD1 30 AGD2 29 AGD3 31 AGD4 32 AG PRESSURE 1937

FILE #000338 PARITY ERRORS 0000 SHOT POINT #002074 TIME 20:24:17
SHIP HEAD 0052 LINE DIRECTION 0047 TBB -002 DRIFT0003 DEPTH 0046 FA
CD1 52 CD2 53 CD3 49 CD4 49 CD5 46 CD6 51
AGD1 30 AGD2 29 AGD3 31 AGD4 32 AG PRESSURE 1923

++NC 2081

FILE #000348 PARITY ERRORS 0000 SHOT POINT #002084 TIME 20:27:29
SHIP HEAD 0052 LINE DIRECTION 0047 TBB -002 DRIFT0003 DEPTH 0046 FA
CD1 54 CD2 53 CD3 50 CD4 50 CD5 47 CD6 50
AGD1 30 AGD2 29 AGD3 30 AGD4 32 AG PRESSURE 1937

FILE #000358 PARITY ERRORS 0014 SHOT POINT #002094 TIME 20:30:41
SHIP HEAD 0052 LINE DIRECTION 0047 TBB -002 DRIFT0003 DEPTH 0046 FA
CD1 51 CD2 53 CD3 49 CD4 49 CD5 44 CD6 48
AGD1 30 AGD2 29 AGD3 30 AGD4 32 AG PRESSURE 1967

++NC 2101

++SOR #178 @ SP 2101

+SH
SHIP'S HEADING? 049

FILE #000368 PARITY ERRORS 0000 SHOT POINT #002104 TIME 20:33:53
SHIP HEAD 0049 LINE DIRECTION 0047 TBB -002 DRIFT0000 DEPTH 0046 FA
CD1 55 CD2 54 CD3 50 CD4 49 CD5 43 CD6 48
AGD1 30 AGD2 28 AGD3 30 AGD4 32 AG PRESSURE 1922

FILE #000378 PARITY ERRORS 0000 SHOT POINT #002114 TIME 20:37:05
SHIP HEAD 0049 LINE DIRECTION 0047 TBB -002 DRIFT0000 DEPTH 0046 FA
CD1 55 CD2 53 CD3 50 CD4 49 CD5 40 CD6 49
AGD1 29 AGD2 28 AGD3 30 AGD4 32 AG PRESSURE 1889

++NC 2121

FILE #000388 PARITY ERRORS 0000 SHOT POINT #002124 TIME 20:40:17
SHIP HEAD 0049 LINE DIRECTION 0047 TBB -002 DRIFT0000 DEPTH 0046 FA
CD1 52 CD2 54 CD3 49 CD4 49 CD5 42 CD6 48
AGD1 29 AGD2 28 AGD3 30 AGD4 32 AG PRESSURE 1924

~~**NC 2141~~

FILE #000398 PARITY ERRORS 0000 SHOT POINT #002134 TIME 20:43:27
SHIP HEAD 0049 LINE DIRECTION 0047 TBB -002 DRIFT0000 DEPTH 0046 FA
CD1 55 CD2 54 CD3 49 CD4 49 CD5 41 CD6 48
AGD1 29 AGD2 28 AGD3 30 AGD4 32 AG PRESSURE 1924

**NC 2141

FILE #000408 PARITY ERRORS 0000 SHOT POINT #002144 TIME 20:46:38
SHIP HEAD 0049 LINE DIRECTION 0047 TBB -002 DRIFT0000 DEPTH 0046 FA
CD1 55 CD2 55 CD3 49 CD4 49 CD5 44 CD6 49
AGD1 29 AGD2 27 AGD3 30 AGD4 32 AG PRESSURE 1955

**SOR 179 @ SP 2151

**SP 2143 SONOBUOY OFF [redacted]

**SP 2145 [redacted] CHANNEL 48 @ 20:48:00

Normal

FILE #000418 PARITY ERRORS 0000 SHOT POINT #002154 TIME 20:49:48
SHIP HEAD 0049 LINE DIRECTION 0047 TBB -002 DRIFT0000 DEPTH 0046 FA
CD1 53 CD2 54 CD3 50 CD4 49 CD5 44 CD6 49
AGD1 29 AGD2 27 AGD3 30 AGD4 32 AG PRESSURE 1922

**NC 2161

FILE #000428 PARITY ERRORS 0000 SHOT POINT #002164 TIME 20:52:59
SHIP HEAD 0049 LINE DIRECTION 0047 TBB -002 DRIFT0000 DEPTH 0046 FA
CD1 55 CD2 55 CD3 49 CD4 49 CD5 43 CD6 48
AGD1 28 AGD2 27 AGD3 30 AGD4 32 AG PRESSURE 1955

FILE #000438 PARITY ERRORS 0000 SHOT POINT #002174 TIME 20:56:11
SHIP HEAD 0049 LINE DIRECTION 0047 TBB -002 DRIFT0000 DEPTH 0046 FA
CD1 53 CD2 52 CD3 49 CD4 49 CD5 42 CD6 49
AGD1 28 AGD2 26 AGD3 29 AGD4 32 AG PRESSURE 1987

**NC 2181

*TBB
=-001

FILE #000448 PARITY ERRORS 0000 SHOT POINT #002184 TIME 20:59:24
SHIP HEAD 0049 LINE DIRECTION 0047 TBB -001 DRIFT0001 DEPTH 0046 FA
CD1 53 CD2 54 CD3 50 CD4 49 CD5 48 CD6 49
AGD1 28 AGD2 26 AGD3 29 AGD4 32 AG PRESSURE 1921

~~**NC 2201~~

~~**SOR #180 @ SP 2201~~

FILE #000458 PARITY ERRORS 0000 SHOT POINT #002194 TIME 21:02:37
SHIP HEAD 0049 LINE DIRECTION 0047 TBB -001 DRIFT0001 DEPTH 0046 FA
CD1 53 CD2 55 CD3 49 CD4 49 CD5 44 CD6 48
AGD1 28 AGD2 26 AGD3 29 AGD4 32 AG PRESSURE 1956

**NC 2201

**SOR #180 @ SP 2201

FILE #000468 PARITY ERRORS 0000 SHOT POINT #002204 TIME 21:05:48
SHIP HEAD 0049 LINE DIRECTION 0047 TBB -001 DRIFT0001 DEPTH 0046 FA
CD1 56 CD2 54 CD3 50 CD4 49 CD5 45 CD6 49
AGD1 28 AGD2 26 AGD3 29 AGD4 32 AG PRESSURE 1957

FILE #000478 PARITY ERRORS 0000 SHOT POINT #002214 TIME 21:08:59
~~SHIP HEAD 0049 LINE DIRECTION 0047 TBB -001 DRIFT0001 DEPTH 0046 FA~~
CD1 53 CD2 53 CD3 50 CD4 49 CD5 45 CD6 49
AGD1 28 AGD2 25 AGD3 29 AGD4 32 AG PRESSURE 1923

**NC 2221

*SH
SHIP'S HEADING? 052

FILE #000488 PARITY ERRORS 0000 SHOT POINT #002224 TIME 21:12:10
SHIP HEAD 0052 LINE DIRECTION 0047 TBB -001 DRIFT0004 DEPTH 0050 FA
CD1 53 CD2 53 CD3 49 CD4 49 CD5 45 CD6 48
AGD1 33 AGD2 34 AGD3 31 AGD4 32 AG PRESSURE 1956

FILE #000498 PARITY ERRORS 0000 SHOT POINT #002234 TIME 21:15:21
SHIP HEAD 0052 LINE DIRECTION 0047 TBB -001 DRIFT0004 DEPTH 0050 FA
CD1 53 CD2 54 CD3 50 CD4 49 CD5 44 CD6 49
AGD1 33 AGD2 34 AGD3 31 AGD4 32 AG PRESSURE 1936

**NC 2241

*SH
SHIP'S HEADING? 052

FILE #000508 PARITY ERRORS 0000 SHOT POINT #002244 TIME 21:18:31
SHIP HEAD 0052 LINE DIRECTION 0047 TBB -001 DRIFT0004 DEPTH 0050 FA
CD1 56 CD2 53 CD3 50 CD4 49 CD5 44 CD6 48
AGD1 33 AGD2 34 AGD3 31 AGD4 32 AG PRESSURE 1828

**SOR # 181 @ SP 2251

~~**NC 2261~~

FILE #000518 PARITY ERRORS 0000 SHOT POINT #002254 TIME 21:21:39
SHIP HEAD 0052 LINE DIRECTION 0047 TBB -001 DRIFT0004 DEPTH 0051 FA
CD1 53 CD2 51 CD3 50 CD4 49 CD5 45 CD6 48
AGD1 32 AGD2 33 AGD3 31 AGD4 32 AG PRESSURE 1912

**NC 2261

FILE #000528 PARITY ERRORS 0000 SHOT POINT #002264 TIME 21:24:46
SHIP HEAD 0052 LINE DIRECTION 0047 TBB -001 DRIFT0004 DEPTH 0054 FA
CD1 52 CD2 53 CD3 49 CD4 49 CD5 44 CD6 47
AGD1 32 AGD2 33 AGD3 31 AGD4 32 AG PRESSURE 1923

FILE #000538 PARITY ERRORS 0000 SHOT POINT #002274 TIME 21:27:55
SHIP HEAD 0052 LINE DIRECTION 0047 TBB -001 DRIFT0004 DEPTH 0050 FA
CD1 53 CD2 53 CD3 49 CD4 49 CD5 42 CD6 47
AGD1 32 AGD2 33 AGD3 31 AGD4 32 AG PRESSURE 1891

**NC 2281

*SH
SHIP'S HEADING? 052

FILE #000548 PARITY ERRORS 0000 SHOT POINT #002284 TIME 21:31:03
SHIP HEAD 0052 LINE DIRECTION 0047 TBB -001 DRIFT0004 DEPTH 0053 FA
CD1 55 CD2 53 CD3 50 CD4 49 CD5 43 CD6 49
AGD1 32 AGD2 32 AGD3 31 AGD4 32 AG PRESSURE 1889

FILE #000558 PARITY ERRORS 0000 SHOT POINT #002294 TIME 21:34:10
SHIP HEAD 0052 LINE DIRECTION 0047 TBB -001 DRIFT0004 DEPTH 0051 FA
CD1 53 CD2 54 CD3 49 CD4 49 CD5 44 CD6 48
AGD1 32 AGD2 32 AGD3 31 AGD4 32 AG PRESSURE 1924

**NC 2301

**SOR #182 @ SP 2301

FILE #000568 PARITY ERRORS 0000 SHOT POINT #002304 TIME 21:37:19
SHIP HEAD 0052 LINE DIRECTION 0047 TBB -001 DRIFT0004 DEPTH 0051 FA
CD1 53 CD2 52 CD3 49 CD4 49 CD5 44 CD6 49
AGD1 32 AGD2 32 AGD3 30 AGD4 32 AG PRESSURE 1922

FILE #000578 PARITY ERRORS 0015 SHOT POINT #002314 TIME 21:40:27
SHIP HEAD 0052 LINE DIRECTION 0047 TBB -001 DRIFT0004 DEPTH 0052 FA
CD1 53 CD2 55 CD3 49 CD4 49 CD5 42 CD6 48
AGD1 31 AGD2 31 AGD3 30 AGD4 32 AG PRESSURE 1955

**NC 2321

FILE #000588 PARITY ERRORS 0000 SHOT POINT #002324 TIME 21:43:35
SHIP HEAD 0052 LINE DIRECTION 0047 TBB -001 DRIFT0004 DEPTH 0052 FA
CD1 55 CD2 55 CD3 50 CD4 48 CD5 42 CD6 49
AGD1 31 AGD2 31 AGD3 30 AGD4 32 AG PRESSURE 1907

FILE #000598 PARITY ERRORS 0000 SHOT POINT [redacted] 21:46:42
SHIP HEAD 0052 LINE DIRECTION 0047 TBB -001 DRIFT0004 DEPTH 0054 FA
CD1 56 CD2 52 CD3 50 CD4 50 CD5 48 CD6 51
AGD1 31 AGD2 31 AGD3 30 AGD4 32 AG PRESSURE 1922

**NC 2341

*SH
SHIP'S HEADING? 051

FILE #000608 PARITY ERRORS 0000 SHOT POINT #002344 TIME 21:49:50
SHIP HEAD 0051 LINE DIRECTION 0047 TBB -001 DRIFT0003 DEPTH 0052 FA
CD1 52 CD2 53 CD3 50 CD4 49 CD5 53 CD6 52
AGD1 31 AGD2 30 AGD3 30 AGD4 32 AG PRESSURE 1954

**EOR 182 SOR 183

FILE #000618 PARITY ERRORS 0000 SHOT POINT #002354 TIME 21:52:57
SHIP HEAD 0051 LINE DIRECTION 0047 TBB -001 DRIFT0003 DEPTH 0052 FA
CD1 54 CD2 54 CD3 50 CD4 49 CD5 56 CD6 51
AGD1 31 AGD2 30 AGD3 30 AGD4 32 AG PRESSURE 1889

**NC/MR 2361

*SH
SHIP'S HEADING? 047

*TBB
=-000

FILE #000628 PARITY ERRORS 0000 SHOT POINT #002364 TIME 21:56:07
SHIP HEAD 0047 LINE DIRECTION 0047 TBB 0000 DRIFT0000 DEPTH 0052 FA
CD1 54 CD2 54 CD3 50 CD4 49 CD5 51 CD6 50
AGD1 30 AGD2 30 AGD3 30 AGD4 32 AG PRESSURE 1922

FILE #000638 PARITY ERRORS 0000 SHOT POINT #002374 TIME 21:59:15
SHIP HEAD 0047 LINE DIRECTION 0047 TBB 0000 DRIFT0000 DEPTH 0052 FA
CD1 56 CD2 54 CD3 50 CD4 49 CD5 51 CD6 50
AGD1 30 AGD2 30 AGD3 30 AGD4 32 AG PRESSURE 1857

**NC/MR 2381

*SH
SHIP'S HEADING? 047

*TBB
=-000

FILE #000648 PARITY ERRORS 0000 SHOT POINT #002384 TIME 22:02:23
SHIP HEAD 0047 LINE DIRECTION 0047 TBB 0000 DRIFT0000 DEPTH 0052 FA
CD1 51 CD2 53 CD3 50 CD4 49 CD5 50 CD6 50
AGD1 30 AGD2 29 AGD3 30 AGD4 32 AG PRESSURE 1784

FILE #000658 PARITY ERRORS 0000 SHOT POINT #002394 TIME 22:05:31
SHIP HEAD 0047 LINE DIRECTION 0047 TBB 0000 DRIFT0000 DEPTH 0052 FA
CD1 52 CD2 53 CD3 49 CD4 49 CD5 45 CD6 50
AGD1 30 AGD2 29 AGD3 29 AGD4 32 AG PRESSURE 1934

**NC/MR 2401 EOR 183 SOR 184

*SH
SHIP'S HEADING? 047

*TBB
=-000

FILE #000668 PARITY ERRORS 0000 SHOT POINT #002404 TIME 22:08:40
SHIP HEAD 0047 LINE DIRECTION 0047 TBB 0000 DRIFT0000 DEPTH 0052 FA
CD1 53 CD2 52 CD3 49 CD4 49 CD5 40 CD6 48
AGD1 30 AGD2 29 AGD3 29 AGD4 32 AG PRESSURE 1923

FILE #000678 PARITY ERRORS 0000 SHOT POINT #002414 TIME 22:11:53
SHIP HEAD 0047 LINE DIRECTION 0047 TBB 0000 DRIFT0000 DEPTH 0053 FA
CD1 52 CD2 52 CD3 49 CD4 49 CD5 42 CD6 50
AGD1 30 AGD2 29 AGD3 29 AGD4 32 AG PRESSURE 1922

**NC/MR 2421