CRUISE REPORT

SHIP UTILIZATION DATA

UNOLS
REV. 5/76

SHIP NAME OCEANUS	OPERATING INST. W.H.O.I.
CRUISE (LEG) NO. 39 Leg I	DATES 2 Feb - 6 Feb 1978
AREA OF OPERATIONS: North Atlantic Ocean (Woods Hole - Savannah)	PORT CALLS: PLACE / DATES
DAYS AT SEA 5 / DAYS IN PORT 0	

PARTICIPATING PERSONNEL

CODE	NAME	TITLE	AFFILIATION
1.	Dr. Bradford Butman	Oceanographer	U.S.G.S.
2.	Mr. John West	Electrical Engineer	"
3.	Mr. Gary Prisby	Electronics Tech.	"
4.	Mr. Nicholas Lefteriou	" "	
5.	Mr. Charles Deadmon	Physical Science Tech.	"
6.	Ms. Stephanie Pfirman	Geologic Field Asst.	"
7.	Mr. Andrew Eliason	Engineer	Eliason Data Service

(2 Feb-6 Feb 78)

PRIMARY PROJECTS (those which govern the principal operations, area and movements of the ship)

PROJECT TITLE AND PRINCIPAL INVESTIGATOR	SPONSORING ACTIVITY	GRANT OR CONTRACT NUMBER	PARTICIPATING PERSONNEL (AS CODED ABOVE)
"USGS Sediment Dynamics" Dr. Bradford Butman	USGS	14-08-0001-15615	1 - 11

ANCILLARY PROJECTS (which are accomplished on a not-to-interfere basis and contribute to the overall effectiveness of the cruise)

PROJECT TITLE AND PRINCIPAL INVESTIGATOR	SPONSORING ACTIVITY	GRANT OR CONTRACT NUMBER	PARTICIPATING PERSONNEL (AS CODED ABOVE)

SIGNATURE Bradford Butman DATE 10 APR. '78

CHIEF SCIENTIST - Bradford Butman

(Continue personnel and project listings on reverse if additional space needed)

ATTACH PAGE SIZE CRUISE TRACK

COST ALLOCATION DATA

DAYS CHARGED	AGENCY OR ACTIVITY CHARGED	GRANT OR CONTRACT NO.
5	U.S. Geological Survey	14-08-0001-15615

SIGNATURE R. P. Dinsmore DATE 4/18/78

Institution Official R. P. Dinsmore

OCEAN_S #39 Leg I

8. Dr. Peter Popenoe	Geologist	U. S. G. S.
9. Ms. Elizabeth Coward	Geologic Field Asst.	"
10. Mr. Alan Goodman	Electronics Technician	"
11. Mr. Frank Jennings	Electronics Engineer	"

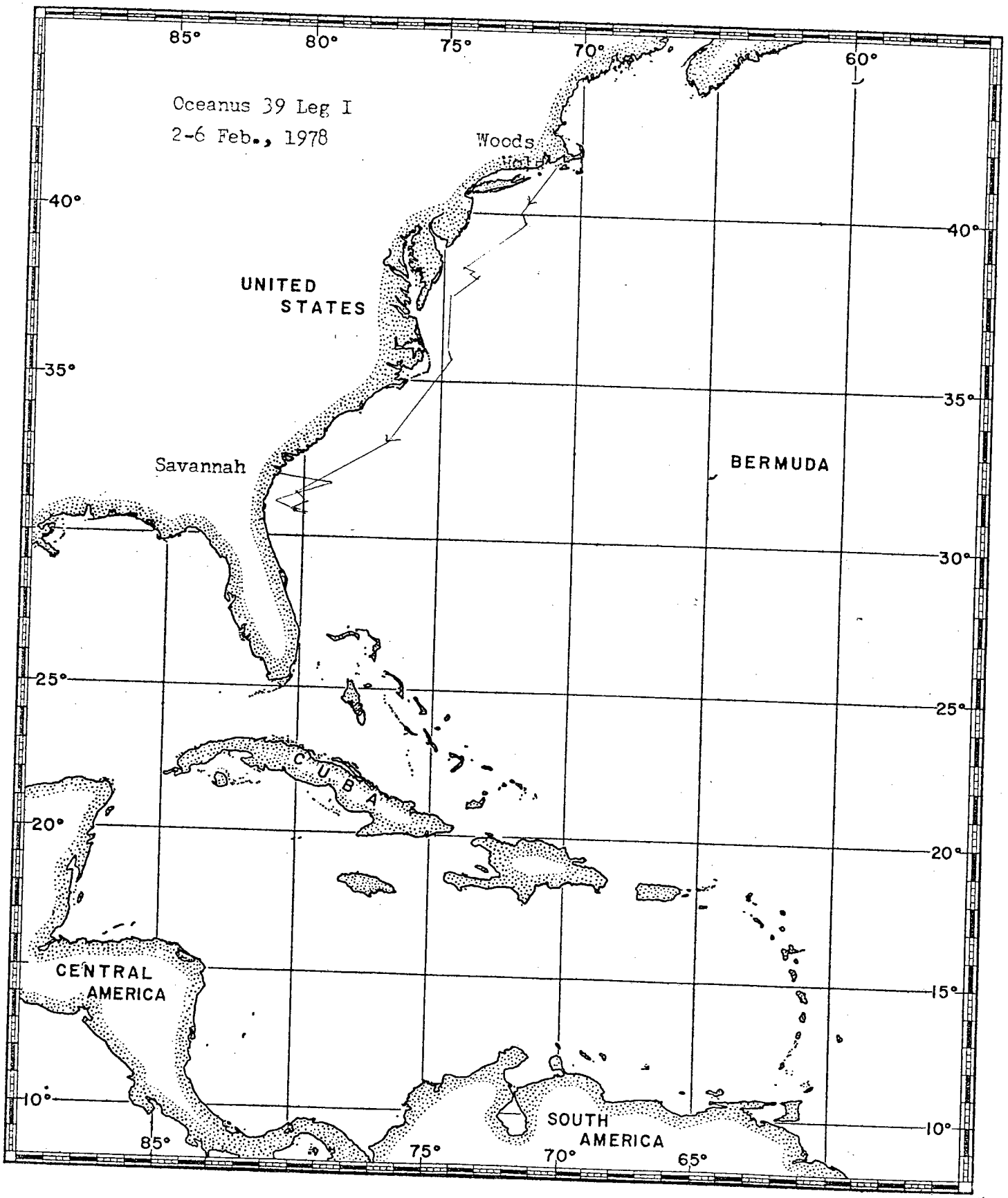
Oceanus 39 Leg I
2-6 Feb., 1978
Woods Hole
UNITED STATES
Savannah
BERMUDA
CUBA
CENTRAL AMERICA
SOUTH AMERICA
85°
80°
75°
70°
60°
65°
40°
35°
30°
25°
20°
15°
10°

WOODS HOLE OCEANOGRAPHIC INSTITUTION
WOODS HOLE, MASSACHUSETTS 02543

31 January 1978

Phone (617) 548-1400
TWX 710-346-6601

Captain Paul C. Howland
Research Vessel OCEANUS
Woods Hole, Massachusetts

Dear Captain Howland:

On or about 2 February 1978, your vessel being ready for sea and weather permitting, you will depart Woods Hole, Mass., on Voyage #39, Legs I and II. This is a cruise for the United States Geological Survey, and its purpose is part of a continuing study of currents and sediment transport of the United States East Coast Continental Shelf. The objective is to recover and deploy several current meter and tripod moorings, and to conduct hydrographic measurements. On Leg I CTD and underway XBT observations will be made as weather permits. The cruise plan on Leg I is as follows:

Georgia Shelf - Station A - 32° 34' N - 78° 40' W
Station B - 31° 05' N - 78° 15' W

The scientific personnel on Leg I, under the direction of Mr. Bradford Butman, Chief Scientist, are:

OCEANUS

Voyage #39
Woods Hole - Savannah, Georgia
2 February - 7 February

Mr. Bradford Butman, Chief Scientist
Mr. John West
Mr. Gary Prisby
Mr. Nicholas Lefteriou
Allen Goodman
Mr. Charles Deadmon
Frank Jennings
Miss Stephanie Pfirman
Miss Betsy Coward
Peter Popenoe
Andrew Eliason

On Leg II, the purpose is to obtain high resolution reflection data in the Virgin Passage and North of St. Thomas.

The scientific personnel on Leg II, under the direction of Dr. Charles Holmes, Chief Scientist, are:

Leg II
Savannah, Georgia - San Juan, Puerto Rico
7 February - 15 February

Dr. Charles Holmes, Chief Scientist
Dr. Louis Garrison
Dr. John Schlee
Mr. Richard Sylvester
Miss Donna Darlington
Dr. John Aaron
Dr. Peter Popenoe
Miss Betsy Coward
Mr. Frank Jennings
Mr. Jack Kindinger
Dr. Joseph Suhadad, Texas A & M University

Your agent in Savannah, Georgia, will be:

Strachan Shipping Company
Savannah Bank Building
P.O. Box 9667
Savannah, Georgia

Your agent in San Juan, Puerto Rico, will be:

Caribe Tugboat Company
Box 2966
Pier #10
San Juan, Puerto Rico

Please advise the Port Office of all personnel changes prior to departure, and maintain twice daily SSB schedules with KXC713 on assigned frequencies.

I wish you a pleasant and successful voyage.

Yours very truly,

Bradford Butman
Bradford Butman
Chief Scientist
Leg I

Bradford Butman for C. Holmes.
Charles Holmes
Chief Scientist
Leg II

Paul C Howland
Paul C. Howland
Captain

R.S. Edwards
R.S. Edwards
Marine Superintendent

R/V OCEANUS _____ Voyage # 39-I

PARTICIPATING SCIENTISTS

NAME (in full) Dr./Mr./Rank	NAT'L.	ON DATE	ON PORT	OFF DATE	OFF PORT	FUNCTION ACADEMIC, ADMIN. OR PROFESSIONAL POSITION/TECH./GUEST OBSERVER/TECH. REP./STUDENT/ETC.	AFFILIATION LAB./COMPANY/SERVICE/COLLEGE/GOVERNMENT/ETC.
1. Dr. Bradford Butman	U. S. A.	2-2-78	WHOI	2-7-78	Savannah	Chief Scientist - Oceanographer	U.S.G.S.
2. John West	"	"	"	"	"	Tech.	"
3. Mr. Gary Prisby	"	"	"	"	"	Tech.	"
4. Mr. Nicholas Lefteriou	"	"	"	"	"	Tech.	"
5. Mr. Charles Deadman	"	"	"	"	"	Tech.	"
6. Miss Stephanie Pfirman	"	"	"	"	"	Tech.	"
7. Mr. Andrew Eliason	"	"	"	"	"	Tech. Consultant	Eliason Assoc.
8. Dr. Peter Popenoe	"	"	"			Geologist	U.S.G.S.
9. Miss Elizabeth Coward	"	"	"			Tech.	"
0. Mr. Allan Goodman	"	"	"			Tech.	"
1. Mr. Frank Jennings	"	"	"			Tech.	"
						P. Howland, Master	
						R/V OCEANUS	

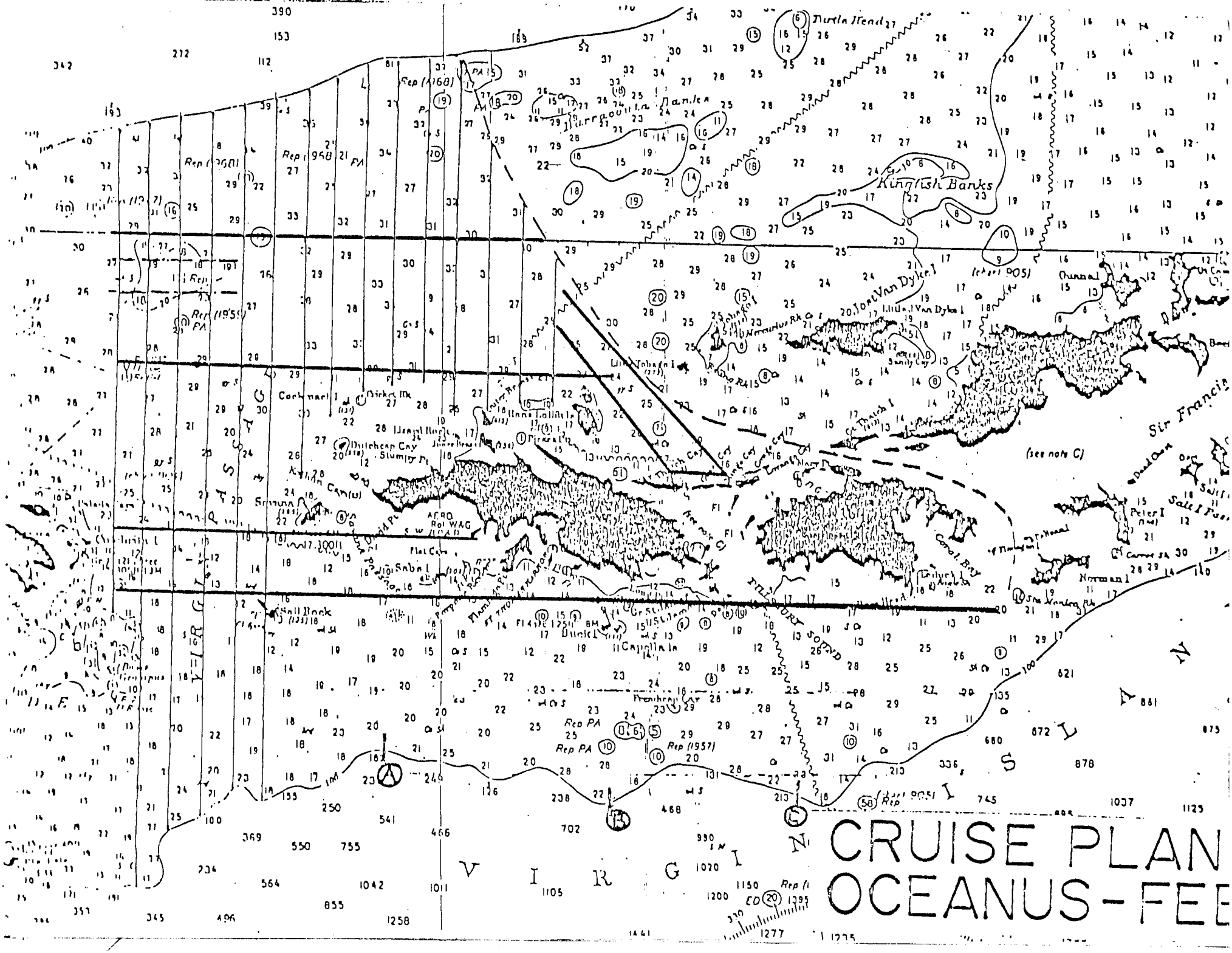
Turtle Head
Kingfish Banks
Jost Van Dyke I
Little Jost Van Dyke I
Tobago I
Cockroach I
Dutchcap Cay
Stumpy Pt
Saba I
Salt Rock
Frenchcap Cay
Coral Bay
Norman I
Peter I
Sir Francis
(see note C)
(chart 905)
Rep PA
Rep (1957)
V I R G I N I S L A N
CRUISE PLAN
OCEANUS-FEE

WOODS HOLE OCEANOGRAPHIC INSTITUTION
WOODS HOLE, MASSACHUSETTS 02543

21 November 1977

Phone (617) 548-1400
TWX 710-346-6601

Caribe Tugboat Company
Box 2966
Pier #10
San Juan, PUERTO RICO 00903

Gentlemen:

I am writing to you requesting that you husband three of our ships at various times during the year 1978. The ships will be in port at San Juan in 1978 as follows:

R/V ATLANTIS II -	4 February to	9 February
	22 February to	26 February
R/V KNORR -	30 January to	1 February
	7 February to	~~12~~ 8 February
R/V OCEANUS -	15 February to	20 February

Research Vessel ATLANTIS II was last at your port in March, 1975.

Research Vessel KNORR was in San Juan in late February, 1976.

Research Vessel OCEANUS has not been in port at San Juan.

R/V ATLANTIS II, International Call Signal KADC, is an American flag, privately owned steam vessel, 210' OA, 33' beam, 17' draft, 1450 GT, homeport Woods Hole, Mass., U.S.A. The Master is Captain David F. Casiles.

R/V KNORR, International Call Signal KCEJ, is a U.S. Government owned motor vessel, with Diesel propulsion, 245' OA, 46' beam, 16' draft, 1806 GT, homeport Woods Hole, Mass., U.S.A. The Master is Captain Emerson H. Hiller.

R/V OCEANUS, International Call Signal WYN-4084, is a U.S. Government owned motor vessel, with Diesel propulsion, 177' OA, 33' beam, 17' draft, 297.6 GT, homeport Woods Hole, Mass., U.S.A. The Master is Captain Paul C. Howland.

The vessels' port requirements will be primarily fresh provisions, bunkers, exchange of some crew and scientists, and shipment of scientific instruments and repair parts for use at sea.

The Masters are authorized to draw funds or request purchase of air passage tickets through your agency for use by crew or scientists.

Fuel will be arranged on a credit basis by this office.

Please forward the vessels' port accounts to my attention for payment, using this address:

Marine Superintendent
Woods Hole Oceanographic Institution
Woods Hole, MA 02543

Please advise me as soon as possible how much you will require in U.S. funds as an advanced deposit against these port accounts.

Yours very truly,

R.S. Edwards
Marine Superintendent

RSE/kee

Preliminary Cruise Plan

R/V OCEANUS

19-27 January 1978

2-15 February 1978

B. Butman
U.S.G.S.
Woods Hole, MA 02543

Introduction

The R/V OCEANUS cruise is part of a continuing study of currents and sediment transport on the U.S. east coast continental shelf. The objective of the cruise is to recover and deploy several current meter and tripod moorings, and to conduct hydrographic measurements.

Legs

Leg I - 19-27 January. Woods Hole to Woods Hole. Mooring deployment and hydrography, Georges Bank and New Jersey shelf.

Leg II - 2-7 February. Woods Hole to Savannah (or Jacksonville). Mooring deployments and hydrography, east coast shelf and Georgia shelf.

Leg III - 7-15 February. Savannah to San Juan, P.R. High resolution profiling (for details of Leg III, see separate cruise plan)

Personnel (preliminary)

Leg I:

Brad Butman - Chief Scientist, U.S.G.S.
John West - Technician, U.S.G.S.
Wm Strahle - Technician, U.S.G.S.
Charles Deadmon - Technician, U.S.G.S.
Gary Prisby - Technician, U.S.G.S.
N. Lefteriou - Technician, U.S.G.S.
Marlene Noble - Physicist, U.S.G.S.
S. Connolly - Technician, U.S.G.S.
S. Pfirman - Technician, U.S.G.S.
A. Eliason - Technician, Eliason Data Services

Leg II:

Brad Butman - Chief Scientist, U.S.G.S.
John West - Technician, U.S.G.S.
G. Prisby - Technician, U.S.G.S.
N. Lefteriou - Technician, U.S.G.S.
C. Deadmon - Technician, U.S.G.S.
S. Pfirman - Technician, U.S.G.S.
B. Cowart - Technician, U.S.G.S.

Leg III:

C. Holmes - Chief Scientist, U.S.G.S.
L. Garrison
J. ~~Coleman~~
J. Schlee
~~T. Edgar~~
D. Sylwester
D. Darlington
J. Aaron
P. Popenoe
B. Cowart
(+ two unnamed)

Preliminary Cruise Plan

Leg I: Woods Hole to Woods Hole (see cruise track)

Georges Bank

Station B (41°05'N, 67°31'W)

Deploy two surface buoys
Deploy tripod
Deploy current meter mooring

Station A (40°51'N, 67°25'W)

Recover current meter mooring
Recover tripod
Recover surface buoy
Reset surface buoy with current meter
Deploy tripod
Deploy current meter mooring

N.J. Shelf

Station B (38°43.5'N, 73°37.5'W)

Recover tripod
Deploy tripod
Deploy current meter mooring

Station E (40°00'N, 72°30'W)

Deploy surface buoy
Deploy tripod

Leg II: Woods Hole to Savannah, Ga.

Georgia Shelf

Station A (32°34'N, 78°40'W)

Deploy surface buoy
Deploy tripod

Station B (31°05'N, 78°15'W)

Deploy surface buoy
Deploy tripod

On both legs I and II, CTD and underway XBT observations will be made along the cruise track at 10-15 nm spacing as time and weather permits.

Equipment

Leg I: Preliminary

Deck - 4 surface buoys
4 tripods
7 2000 lb. anchors
3 41" steel floats

Lab - 7 current meters
3 releases
CTD, XBT electronics
Computer
Loran C
AMF electronics

Leg II:

Deck - 2 surface buoys
2 tripods
2 2000 lb. anchors

Lab - CTD, XBT electronics
Computer
Loran C
AMF electronics

Figures

1 Tripod schematic

2 Cruise track, Leg I

3 Cruise track, Leg II

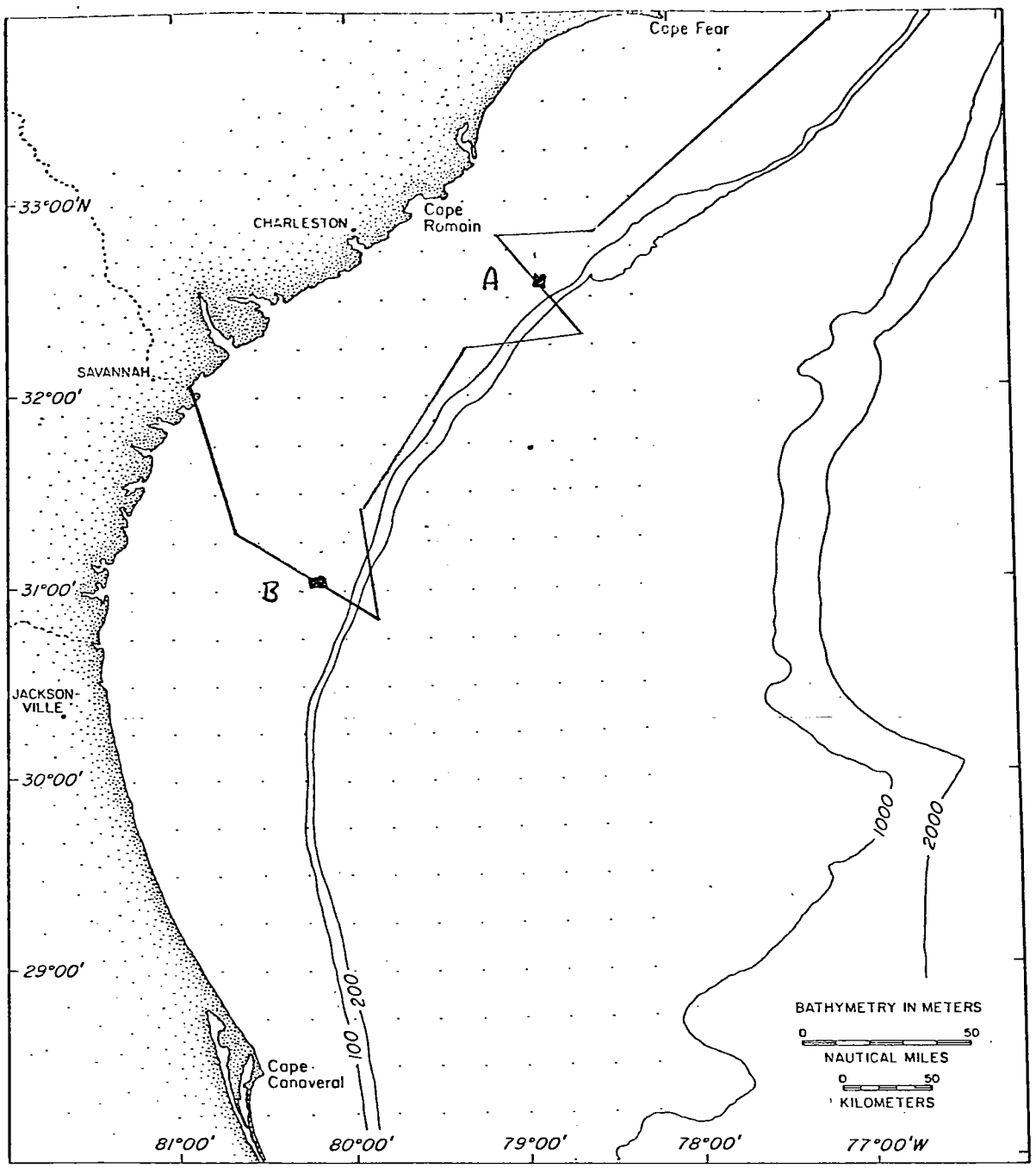

Preliminary cruise track, R/V OCEANUS, 2-7 February, 1978

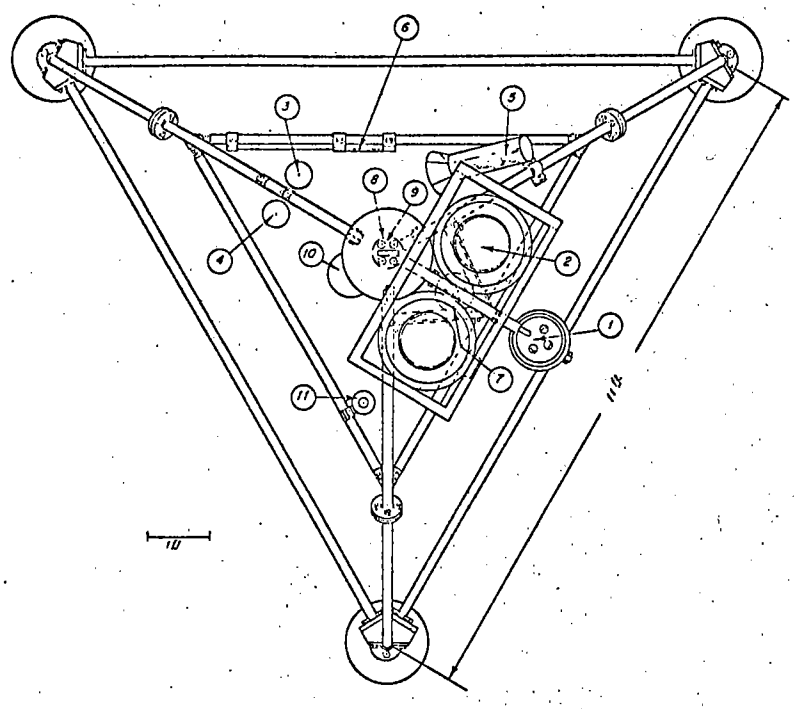

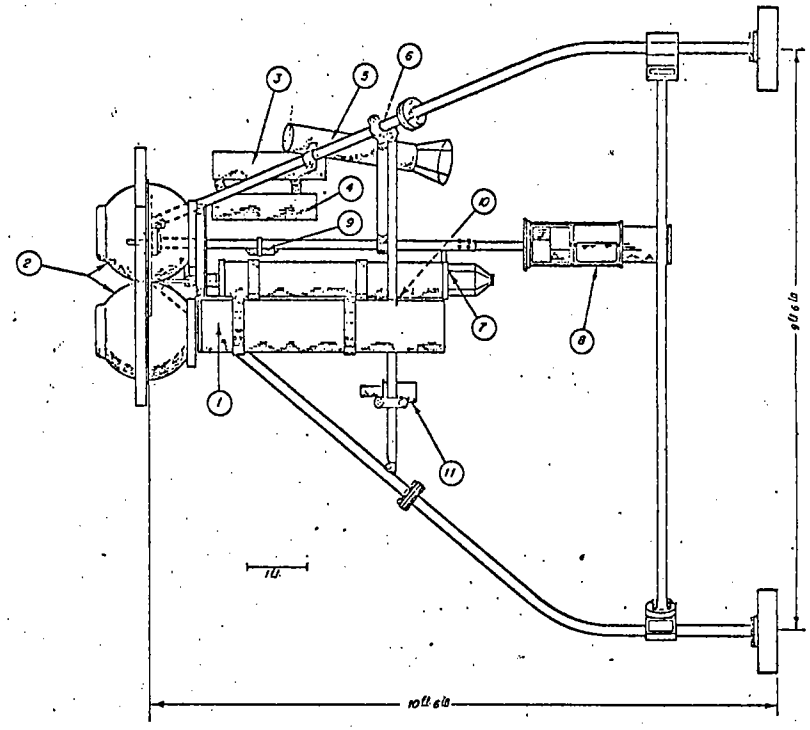

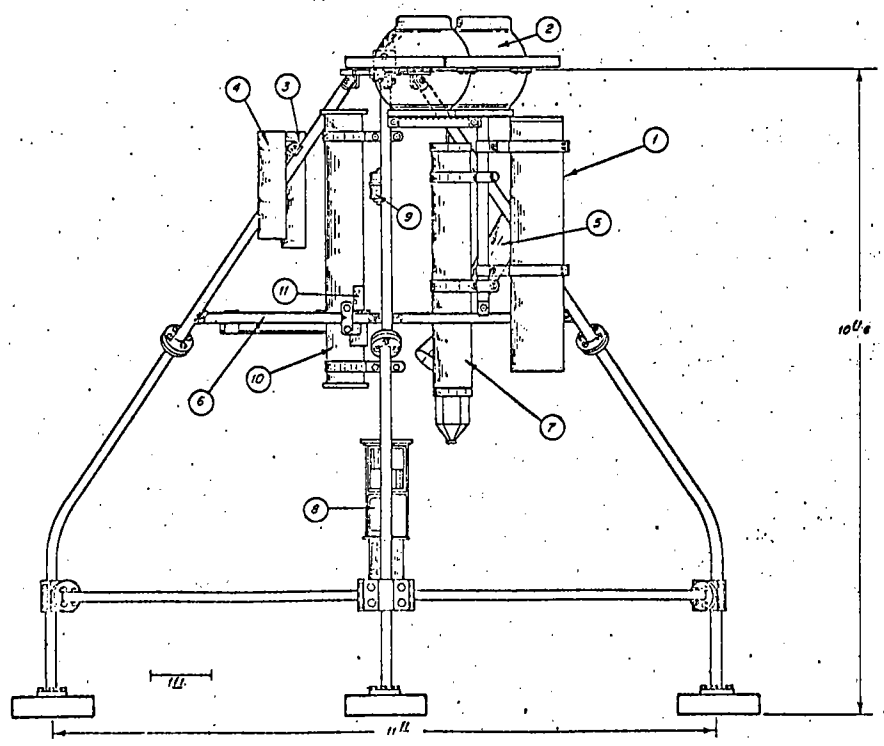

ATTACHED COMPONENTS	
1	ROPE CANISTER
2	RECOVERY FLOATS
3	BENTHOS CAMERA
4	CAMERA BATTERY PACK
5	STROBE LIGHT
6	TRANSMISSOMETER / NEPHELOMETER
7	AMF RELEASE
8	CURRENT METER
9	PRESSURE SENSOR
10	SEA DATA ELECTRONICS / RECORDER
11	TILT PINGER

WOODS HOLE OCEANOGRAPHIC INSTITUTION

UNITED STATES GEOLOGICAL SURVEY
SEDIMENT MONITORING TRIPOD ASSEMBLY